FLB Series

FLB-FK1-...

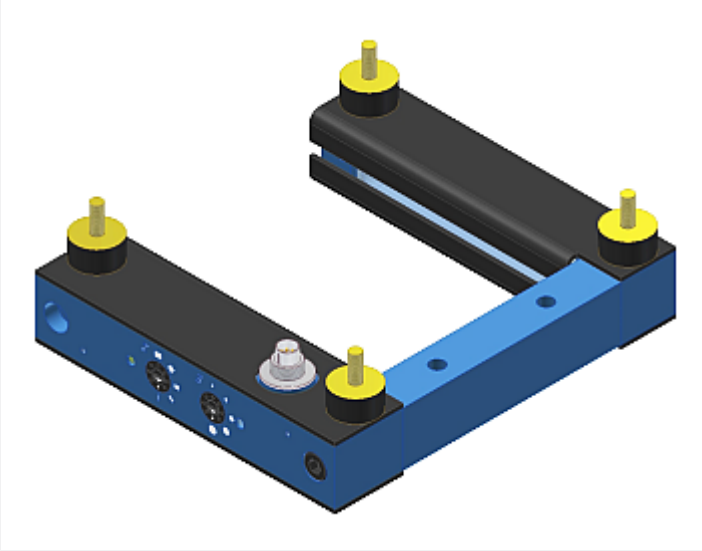

- Integrated electronics
- High sensitivity (adjustable via 5-step switch)
- Pulse length adjustable via 5-step switch
- Dynamic and static output
- Analog output 0 ... +10V or 4...20mA
- Switching state indication by means of red/green LED
- Dirt accumulation indication by means of yellow LED
- Various sizes available (light curtain 60 mm ... 300 mm)
- Optics mechanically protected by means of baffle plate
- Sturdy aluminum housing

Design

Product name:

FLB-FK1-(frame size A/B)*-Q
FLB-FK1-(frame size A/B)*-Qinv
FLB-FK1-(frame size A/B)*-Q-ANA
FLB-FK1-(frame size A/B)*-Qinv-ANA

Q = Switching output:
PNP bright-switching (PNP n.c.)
NPN dark-switching (NPN n.o.)

Qinv = Additional switching output:
PNP dark-switching (PNP n.o.)
NPN bright-switching (NPN n.c.)

ANA = Additional analog output
voltage (0V ... +10V)
respectively
current (4...20mA) in connection
with cable cab-flb8-4/20

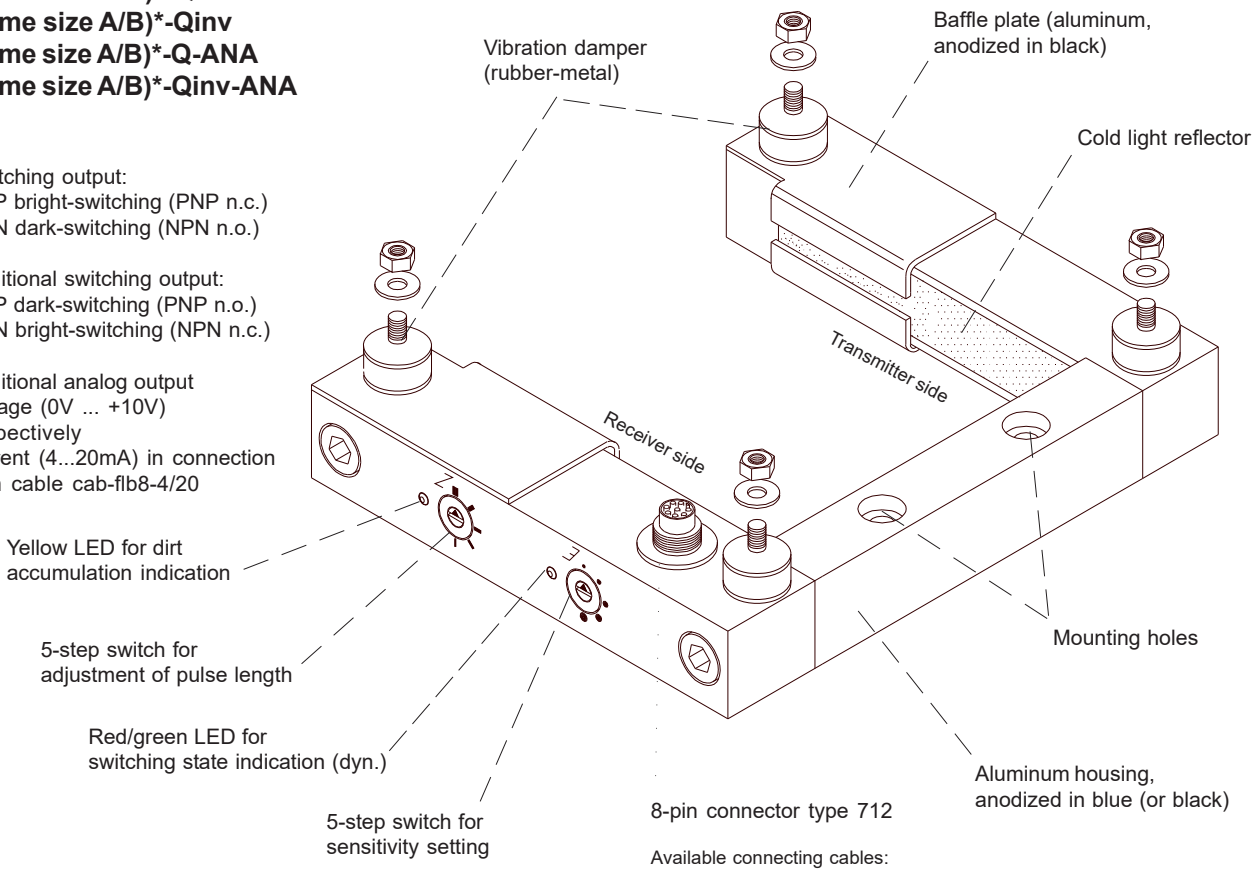

8-pin connector type 712

Available connecting cables:
cab-flb8
cab-flb8/702
cab-flb7/680
cab-flb8-4/20 (current output 4...20mA)

100 % reparierbar/ reparable* * ausgenommen Totalschaden/ excluding total loss

***Available frame sizes (A/B):**
(dimensions cf. page 3)

A = 60 / 80 / 100 / 160 / 200 / 300 mm (width of cold light reflector)
B = 60 / 80 / 100 / 160 / 200 / 300 mm (distance between transmitter and receiver)
(A can be combined with any B)

Technical Data

Model	**FLB-FK1-...**
Max. distance transmitter/receiver	300 mm
Min. detectable object	with dim. A = 60, 80, 100 mm: typ. 0.3 mm with dim. A = 160 mm: typ. 0.5 mm with dim. A = 200 mm: typ. 0.7 mm with dim. A = 300 mm: typ. 1.0 mm
Analog output (0V...+10V)	optional
Optical filter	Cold-light reflector
Light source	Infrared
Voltage supply	+12VDC ... +32VDC, protected against polarity reversal, overload protected
Pulsating light operation	approx. 5 kHz
Ambient light	up to 5000 Lux
Type of protection	IP67
Current consumption	200 mA
EMC test acc. to	DIN EN 60947-5-2 CE
Connector type	8-pole connector, Binder series 712
Operating temperature range	-20°C ... +60°C
Storage temperature range	-20°C ... +85°C
Housing	Aluminum, anodized in blue
Max. switching current	200 mA, short-circuit-proof
Switching frequency	typ. 1 kHz
Outputs	All types: 1x QUASI STATIC (typ. 10....200s, depends on degree of covering of optics) 1x DIRT ACCUMULATION additionally for type "Q": 1x DYNAMIC (pnp bright-switching = pnp n.c. / npn dark-switching = npn n.o.) for type "Qinv": 1x DYNAMISCH (pnp bright-switching = pnp n.c. / npn dark-switching = npn n.o.) 1x INVERS DYNAMIC (pnp dark-switching/ = pnp n.o. / npn bright-switching = npn n.c.) for type "Q-ANA": 1x DYNAMIC (pnp bright-switching = pnp n.c. / npn dark-switching = npn n.o.) 1x ANALOG (0V...+10V) or 1x ANA CURRENT (4...20mA, using cable cab-flb8-4/20) for type "Qinv-ANA": 1x INVERS DYNAMIC (pnp dark-switching/ = pnp n.o. / npn bright-switching = npn n.c.) 1x ANALOG (0V...+10V) or 1x ANA CURRENT (4...20mA, using cable cab-flb8-4/20)
Sensitivity setting	in 5 steps by means of step switch
Pulse lengthening	in 5 steps by means of step switch (20 ms ... 300 ms)
Dirt accumulation display	By means of yellow LED and digital DIRT ACCUMULATION output
Switching state display	By means of bi-color LED: RED (object passes light curtain) / GREEN (light curtain free, or no change)

Dimensions

FLB-FK1-(frame size A/B):

Frame size A/B (mm):

60/60
60/80
60/100
60/160
60/200
60/300

80/60
80/80
80/100
80/160
80/200
80/300

100/60
100/80
100/100
100/160
100/200
100/300

160/60
160/80
160/100
160/160
160/200
160/300

200/60
200/80
200/100
200/160
200/200
200/300

300/60
300/80
300/100
300/160
300/200
300/300

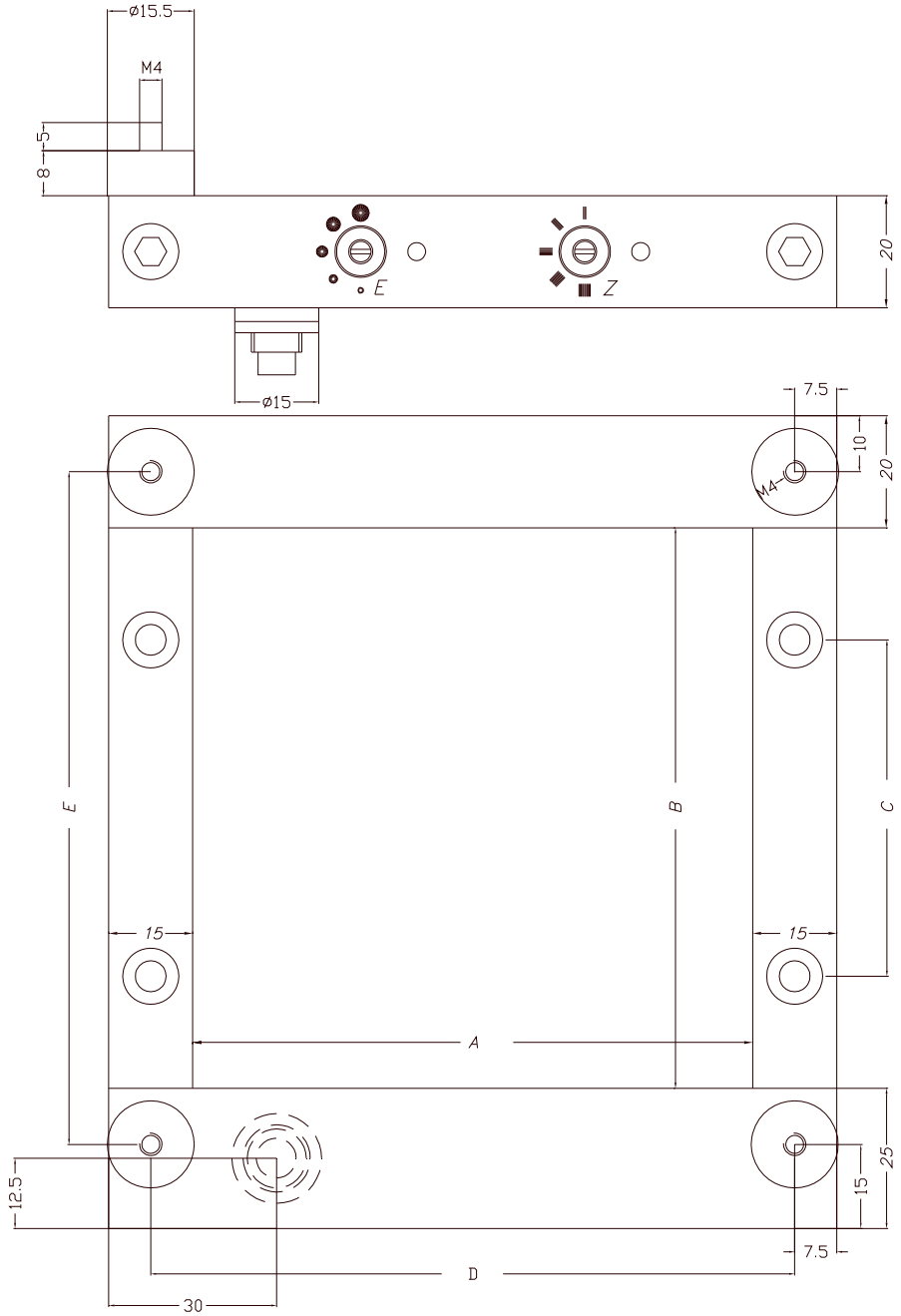

Dim.	A	B	C	D	E
	60 80 100 160 200 300	B*	B - 40	75 95 115 175 215 315	B + 20

(All dimensions in mm)

*B = 60/80/100/160/200/300

Connector Assignment

Connector assignment FLB-FK1:

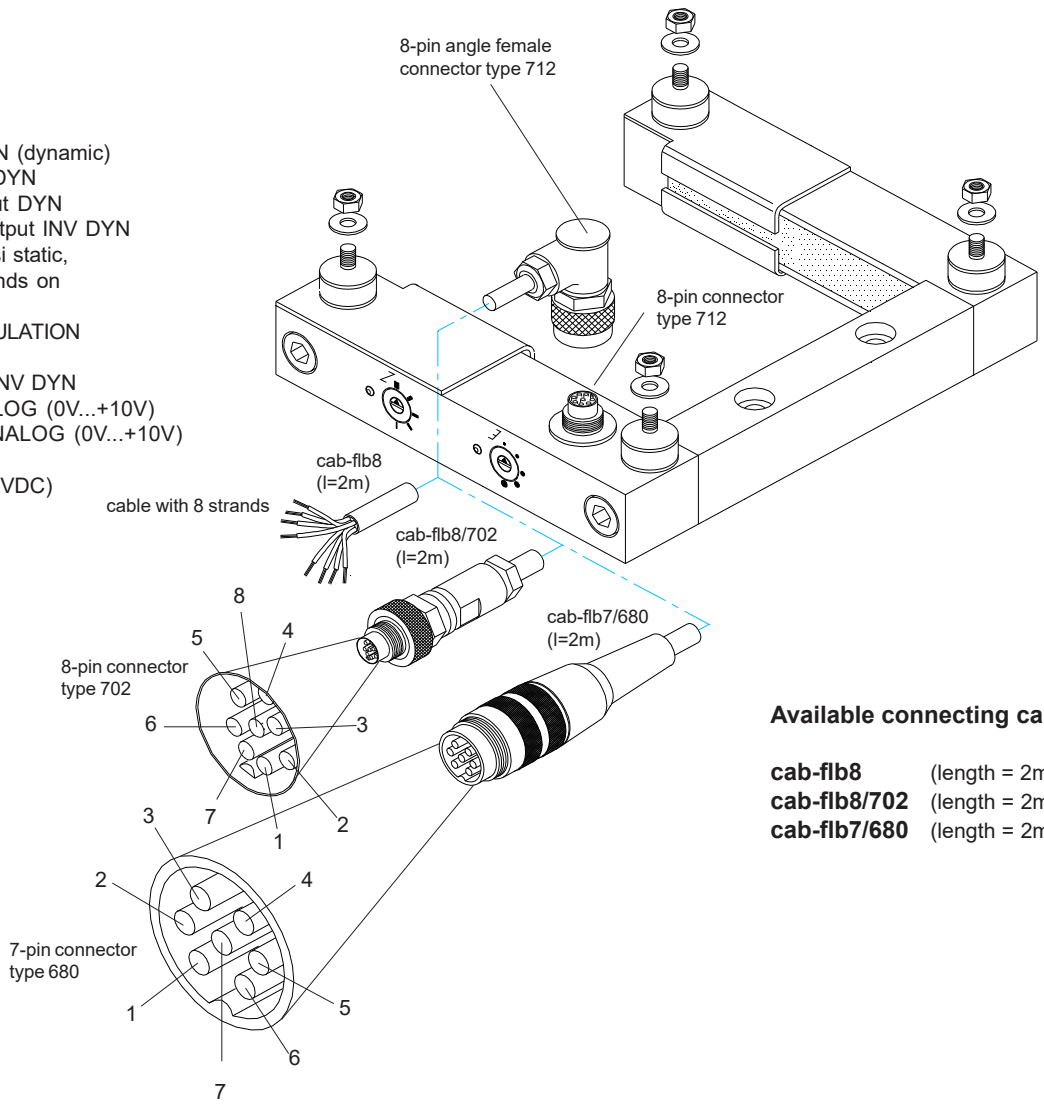

8-pin connector type 712

Pin No.:	Assignment:
1	with „Q“: Output DYN (dynamic) with „Qinv“: Output DYN with „Q-ANA“: Output DYN with „Qinv-ANA“: Output INV DYN
2	Output QSTAT (quasi static, typ. 10...200s, depends on covering of optics)
3	Output DIRT ACCUMULATION
4	with "Q": n.c. with "Qinv": Output INV DYN with "Q-ANA": ANALOG (0V...+10V) with „Qinv-ANA“: ANALOG (0V...+10V)
5	GND (0V)
6	+Ub (+12VDC ... +32VDC)
7	not connected
8	not connected

Available connecting cables:

cab-flb8	(length = 2m)
cab-flb8/702	(length = 2m)
cab-flb7/680	(length = 2m)

Connecting cable cab-flb7/680

Pin No.:	Assignment:	Color:
1	with "Q": Output DYN with "Qinv": Output DYN with "Q-ANA": Output DYN with „Qinv-ANA“: Output INV DYN	white
2	Output QSTAT (quasi static, typ. 10...200s, depends on covering of optics)	black
3	Output DIRT ACCUMULATION	grey
4	with "Q": n.c. with "Qinv": Output INV DYN with "Q-ANA": ANALOG (0V...10V) with „Qinv-ANA“: ANALOG (0V...10V)	yellow
5	GND (0V)	blue
6	+Ub (+12VDC ... +32VDC)	brown
7	not connected	green

Connecting cable cab-flb8 or cab-flb8/702

Pin No.:	Assignment:	Color:
1	with "Q": Output DYN with "Qinv": Output DYN with "Q-ANA": Output DYN with „Qinv-ANA“: Output INV DYN	white
2	Output QSTAT (quasi static, typ. 10...200s, depends on covering of optics)	black
3	Output DIRT ACCUMULATION	grey
4	with "Q": n.c. with "Qinv": Output INV DYN with "Q-ANA": ANALOG (0V...10V) with „Qinv-ANA“: ANALOG (0V...10V)	yellow
5	GND (0V)	blue
6	+Ub (+12VDC ... +32VDC)	brown
7	not connected	green
8	not connected	red

Connector Assignment

Special version:
CURRENT OUTPUT 4mA ... 20mA
by using an FLB-FK1-...-ANA together
with connecting cable cab-flb8-4/20-*(length)*

Connector assignment FLB-FK1-...-ANA:

8-pole connector type 712

Pin-No.:	Assignment:
1	with "Q": Output DYN with "Qinv": Output DYN with "Q-ANA": Output DYN with „Qinv-ANA“: Output INV DYN
2	Output QSTAT (quasi static, typ. 10...200s, depends on covering of optics)
3	Output DIRT ACCUMULATION
4	with "Q": n.c. with "Qinv": Output INV DYN with "Q-ANA": ANALOG (0V...+10V) with „Qinv-ANA“: ANALOG (0V...+10V)
5	GND (0V)
6	+Ub (+12VDC ... +32VDC)
7	n.c.
8	n.c.

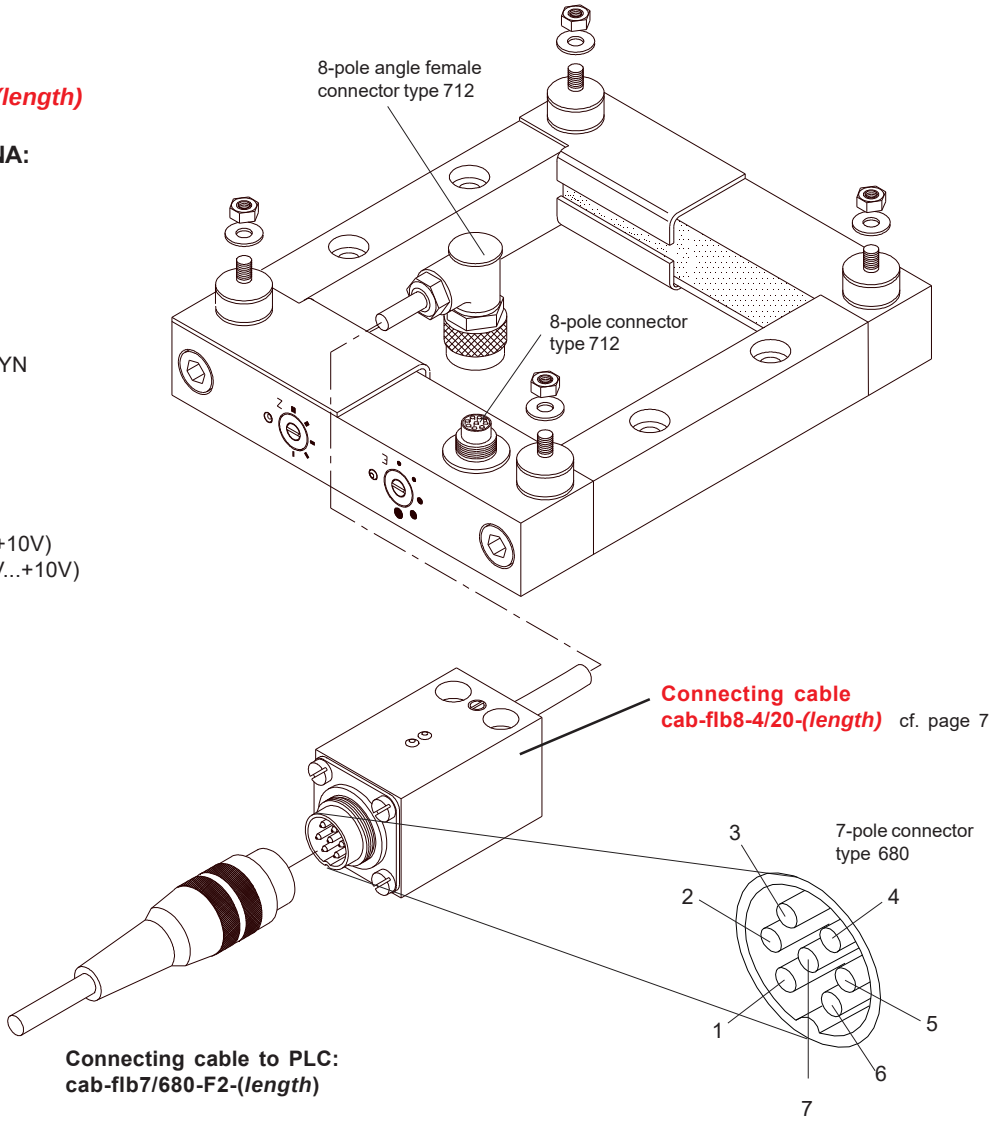

Connecting cable to PLC:
cab-flb7/680-F2-(*length*)

Connecting cable cab-flb7/680-F2

Pin No.:	Assignment:	Color:
1	with "Q": Output DYN with "Qinv": Output DYN with "Q-ANA": Output DYN with „Qinv-ANA“: Output INV DYN	white
2	Output QSTAT (quasi static, typ. 10...200s, depends on covering)	black
3	Output DIRT ACCUMULATION	grey
4	with "Q": n.c. with "Qinv": Output INV DYN with "Q-ANA": ANALOG (0V...10V) with „Qinv-ANA“: ANALOG (0V...10V) with „Q-ANA“ and cab-flb-y-4/20: I-OUT (4mA...20mA) with „Qinv-ANA“ and cab-flb-y-4/20: I-OUT (4mA...20mA)	yellow
5	GND (0V)	blue
6	+Ub (+12VDC ... +32VDC)	brown
7	not connected	green

7-pole connector type 680 (connecting cable cab-flb8-4/20):

Pin-No.:	Assignment:
1	Output DYN
2	Output QSTAT (quasi static, typ. 10...200s, depends on covering of optics)
3	I-OUT (4mA ... 20mA)
4	n.c.
5	GND (0V)
6	+Ub (+12VDC ... +32VDC)
7	n.c.

Setting

Sensitivity setting (step-switch „E“):

Sensitivity can be adjusted by means of a step-switch.
The term ‘sensitivity’ defines the minimum detectable part size.
The sensitivity can be adjusted in 5 steps.

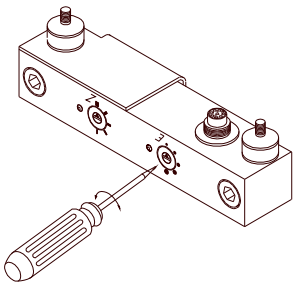

Step	Part size (dyn.)	Part size (stat.)
1	>= 0.5 mm	>= 2 mm
2	>= 0.7 mm	>= 3 mm
3	>= 1.3 mm	>= 5 mm
4	>= 1.7 mm	>= 7 mm
5	>= 2.5 mm	>= 10 mm

Adjustment of pulse lengthening (step-switch „Z“):

The pulse length of the dynamic output can be adjusted by means of a step-switch. 5 pulse lengths are available.

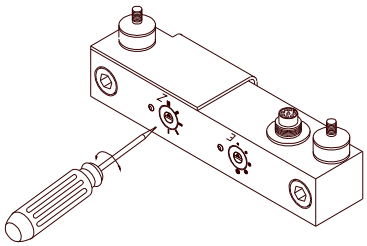

Step	Pulse length
1	300 ms
2	200 ms
3	100 ms
4	50 ms
5	20 ms

Dirt accumulation display (yellow LED):

In addition to a digital dirt accumulation output the user is informed about the dirt accumulation status by means of a yellow LED.
If this yellow LED lights up, the transmitter or receiver side should be checked for dirtying.

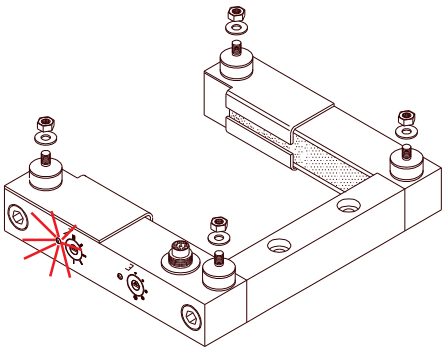

Switching state display (red/green LED):

The switching state is indicated by a red/green LED. In case that a measuring object is detected, the LED changes from GREEN to RED.
The two-color-LED is coupled to the dynamic output, i.e. after pulse end the LED returns to its starting state = GREEN.

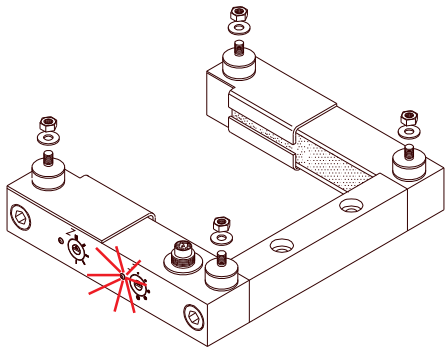

Cable cab-flb8-4/20

Connecting cable cab-flb8-4/20-*(length)*
(suitable for FLB-FK1-...-ANA for optaining an analog current output 4mA...20mA)

Cable aailable in different lengths:

cab-flb8-4/20-1m (l=1m)
cab-flb8-4/20-2m (l=2m)
cab-flb8-4/20-3m (l=3m)

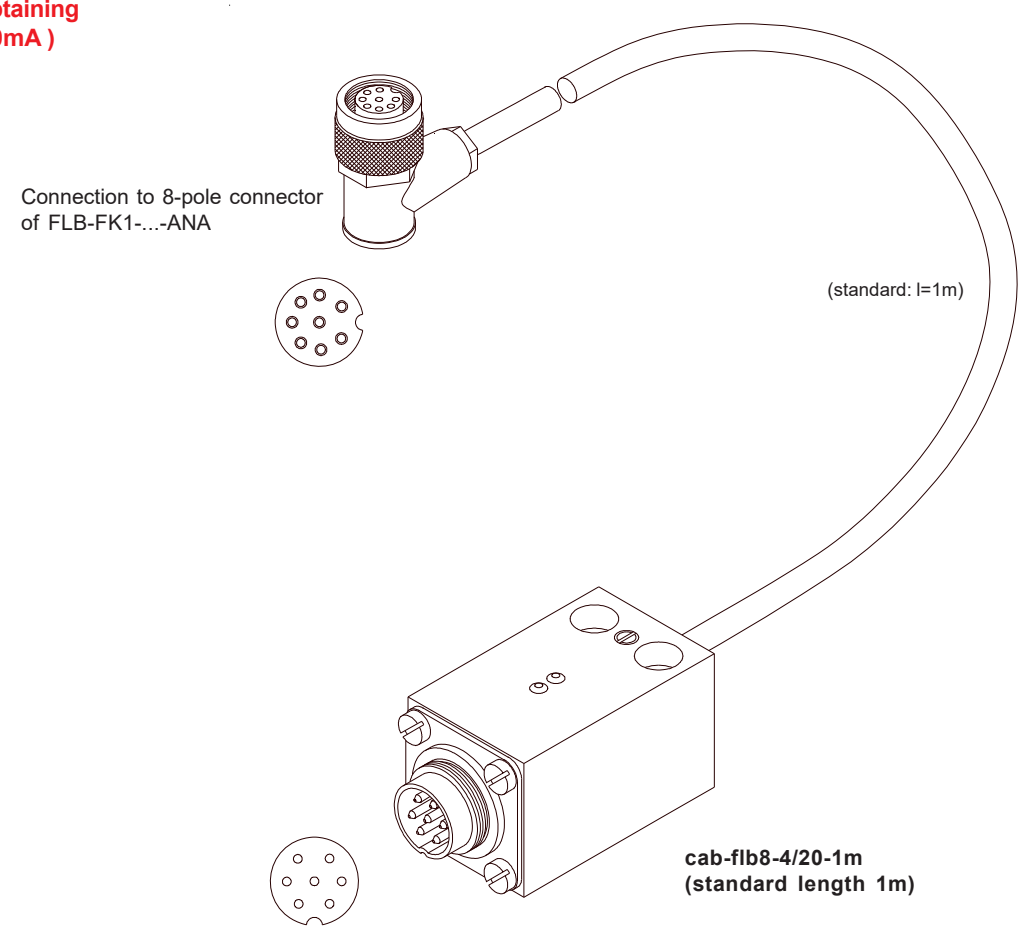

Suitable connecting cable (to PLC):
cab-flb7/680-F2-*(length)*

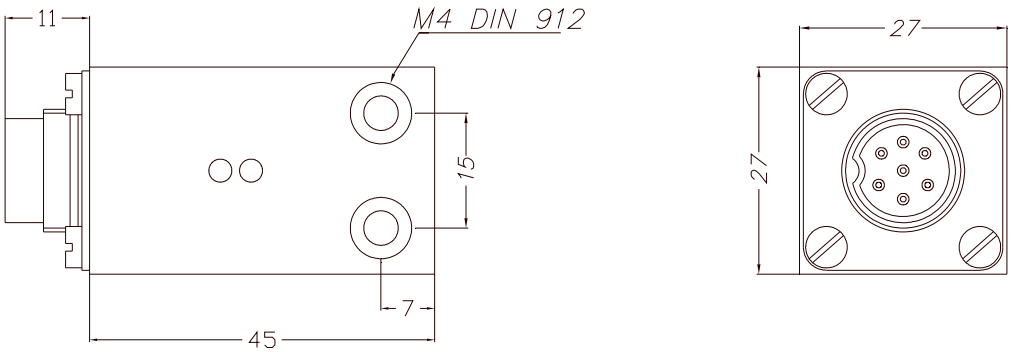

(All dimensions in mm)