FLB Series

FLB-F-...-C
FLB-H-...-C
FLB-V-...-C

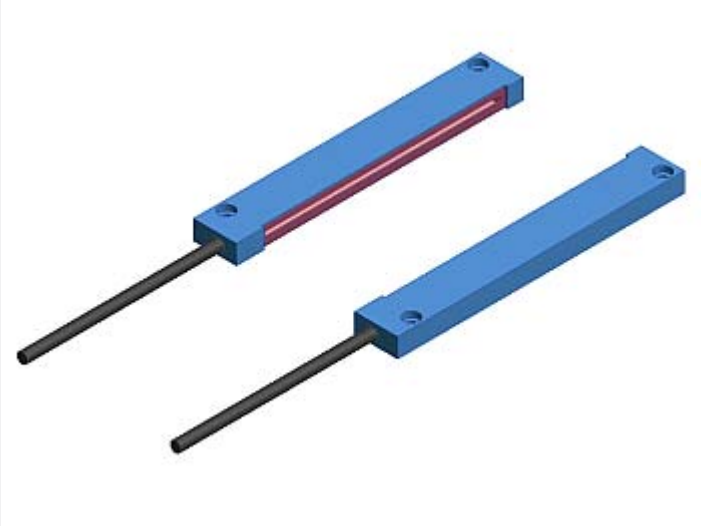

- **Suitable for use with amplifier FLB-CON3-5 (delivery is only possible together with FLB-CON3-5)**
- Homogeneous light distribution (IR light curtain)
- Various models available (fork or split version)
- Various sizes of light curtain available (5 mm to 100 mm)
- High sensitivity (part sizes starting from Ø 50 µm)
- Scratch-resistant optics cover
- Oil-resisting cable and housing (IP67)
- Sturdy aluminum housing

Design

Product name:

FLB-F-(size)*-C (1m)
FLB-H-(size)*-C (1m)
FLB-V-(size)*-C (1m)

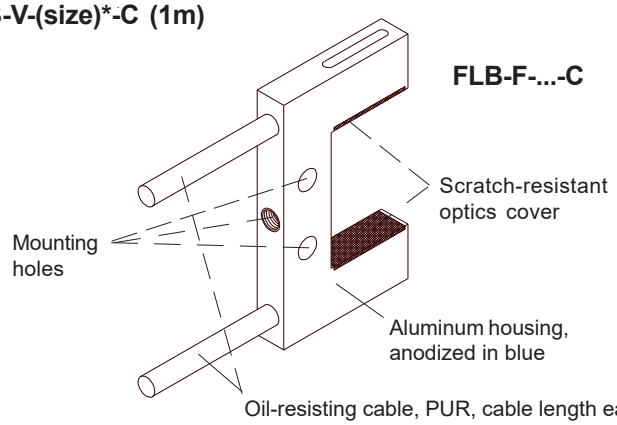

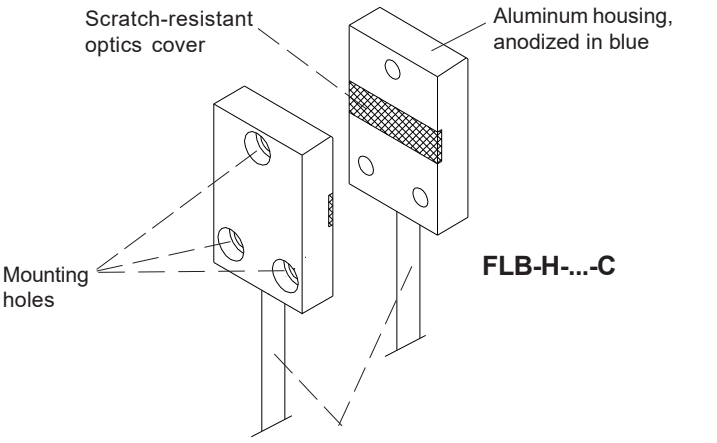

***Available sizes:** (dimensions cf. page 3):

FLB-F-...-C:	FLB-H-...-C:	FLB-V-...-C:
FLB-F-05/20-C	FLB-H-05-C	FLB-V-05-C
FLB-F-10/20-C	FLB-H-10-C	FLB-V-10-C
FLB-F-15/20-C	FLB-H-15-C	FLB-V-15-C
FLB-F-20/20-C	FLB-H-20-C	FLB-V-20-C
FLB-F-20/40-C	FLB-H-25-C	FLB-V-25-C
FLB-F-20/50-C	FLB-H-30-C	FLB-V-30-C
FLB-F-25/20-C	FLB-H-40-C	FLB-V-40-C
FLB-F-30/10-C		
FLB-F-30/20-C		
FLB-F-40/20-C		
FLB-F-40/25-C		
FLB-F-40/40-C		

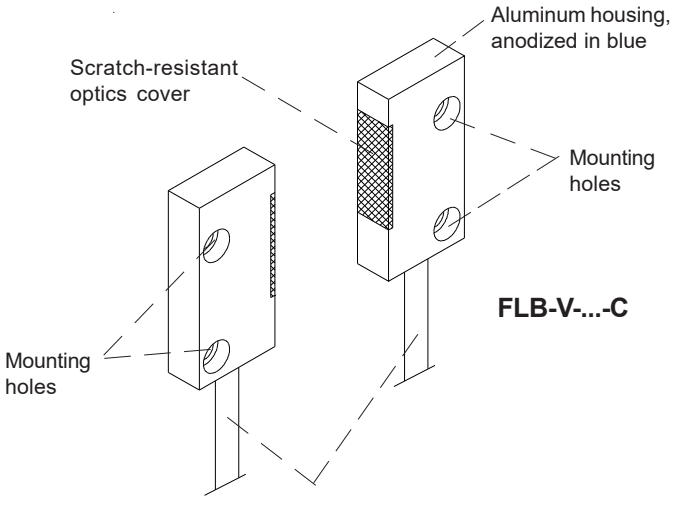

Technical Data

Type	FLB-F-...-C	FLB-H-...-C	FLB-V-...-C
Max. distance transmitter/receiver	= fórk width (depends on fork size)	max. 30 mm	max. 30 mm
Min. detectable object	typ. 0.2 mm (depends on the sensor size and type of electronic control unit used)		
Optical filter	IR filter RG715		
Illuminant	Infrared light		
Power supply	+12VDC ... +32VDC, reversed-polarity protected, overcurrent protected		
Ambient light	up to 5000 Lux (with AC-operation)		
Enclosure rating	IP67		
Current consumption	200 mA		
EMC test acc. to	DIN EN 60947-5-2 CE		
Connection to amplifier	Sensor frontend is fix mounted to amplifier FLB-CON3-5 by means of integrated cable (components will be delivered fully assembled)		
Cable length	1m (each at transmitter and receiver side)		
Operating temperature range	-20°C ... +60°C		
Storage temperature range	-20°C ... +60°C		
Housing material	Aluminum, anodized in blue		
Housing dimensions	cf. page 3		

Dimensions

Suitable frontends for connection with FLB-CON3-5:
(please choose frontend and order this together with FLB-CON3-5, components will be delivered fully assembled)

FLB-F-...-C (1m):
(fork version)

FLB-F-05/20 (A = 5 mm, B = 20 mm)
FLB-F-10/20 (A = 10 mm, B = 20 mm)
FLB-F-15/20 (A = 15 mm, B = 20 mm)
FLB-F-20/20 (A = 20 mm, B = 20 mm)
FLB-F-20/40 (A = 20 mm, B = 40 mm)
FLB-F-20/50 (A = 20 mm, B = 50 mm)
FLB-F-25/20 (A = 25 mm, B = 20 mm)
FLB-F-30/10 (A = 30 mm, B = 10 mm)
FLB-F-30/20 (A = 30 mm, B = 20 mm)
FLB-F-40/20 (A = 40 mm, B = 20 mm)
FLB-F-40/25 (A = 40 mm, B = 25 mm)
FLB-F-40/40 (A = 40 mm, B = 40 mm)

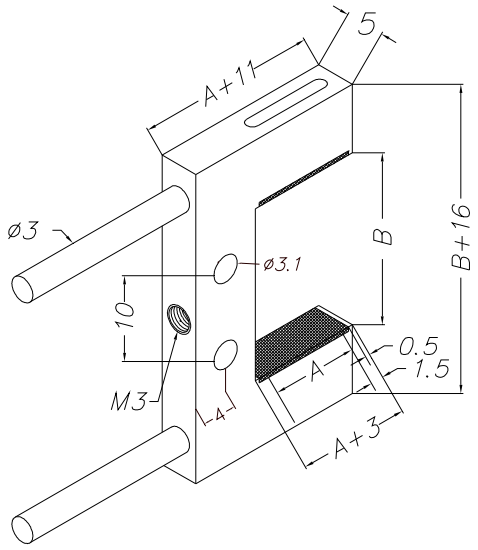

Dimension A = length of active measuring range

Dimension B = fork width = distance transmitter/receiver

FLB-H-...-C (1m):
(split version with horizontal light curtain)

FLB-H-05 (A = 5 mm)
FLB-H-10 (A = 10 mm)
FLB-H-15 (A = 15 mm)
FLB-H-20 (A = 20 mm)
FLB-H-25 (A = 25 mm)
FLB-H-30 (A = 30 mm)
FLB-H-40 (A = 40 mm)

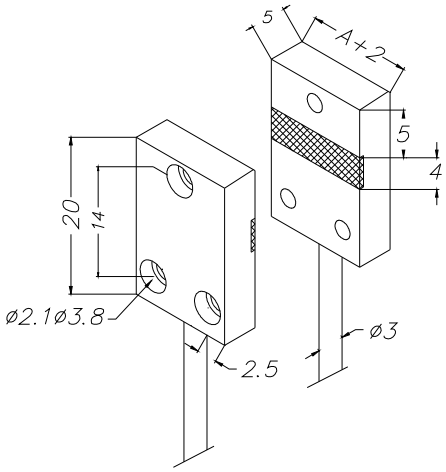

Dimension A
(length of active measuring range):

5 mm
10 mm
15 mm
20 mm
25 mm
30 mm
40 mm
50 mm

FLB-V-...-C (1m):
(split version with vertical light curtain)

FLB-V-05 (A = 5 mm)
FLB-V-10 (A = 10 mm)
FLB-V-15 (A = 15 mm)
FLB-V-20 (A = 20 mm)
FLB-V-25 (A = 25 mm)
FLB-V-30 (A = 30 mm)
FLB-V-40 (A = 40 mm)

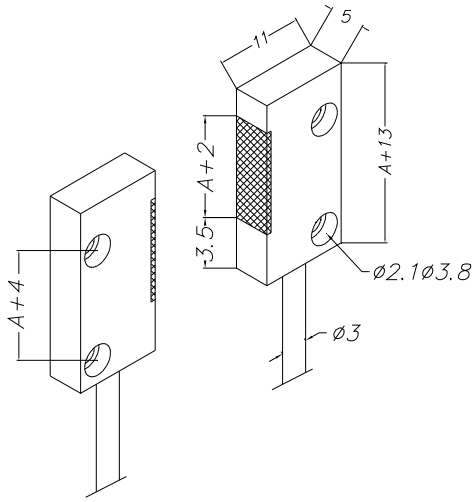

Dimension A
(length of active measuring range):

5 mm
10 mm
15 mm
20 mm
25 mm
30 mm
40 mm
50 mm
60 mm

Alle Abmessungen in mm

Connector Assignment

Connection of FLB-F, FLB-H, FLB-V to FLB-CON3-5:

5-pole connector type Binder Series 680

Pin-No.:	Color:	Assignment:
1	blue	0V
2	brown	+Ub (+12 ... +32VDC)
3	white	Output Q
4	black	Output DYNAMIC (15 ms)
5	red	Connection control

Brücke

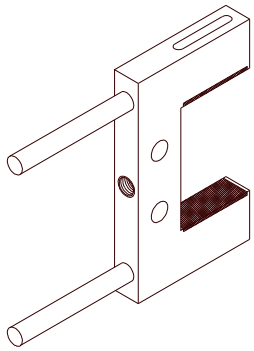

e.g. FLB-F-...-C

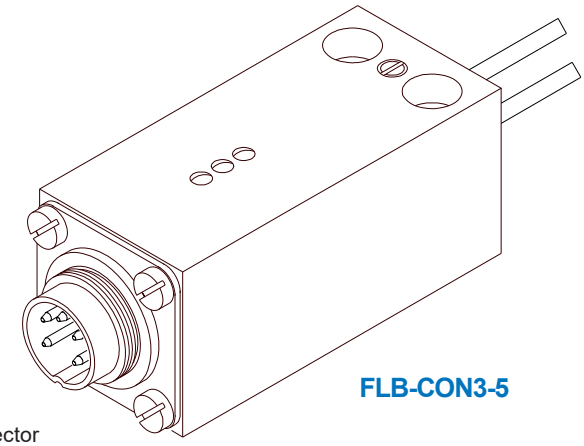

FLB-CON3-5

5-pole connector
Binder series 680
(connection to PLC)

Connecting cable:
cab-agl5-2m (l=2m)

Application Examples

FLB-H-...-C

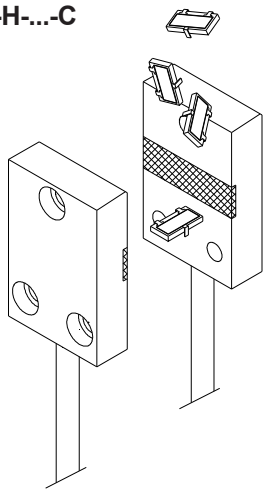

FLB-V-...-C

