FIA Series

FIA-L-08-d0.2-...-C-RL-...

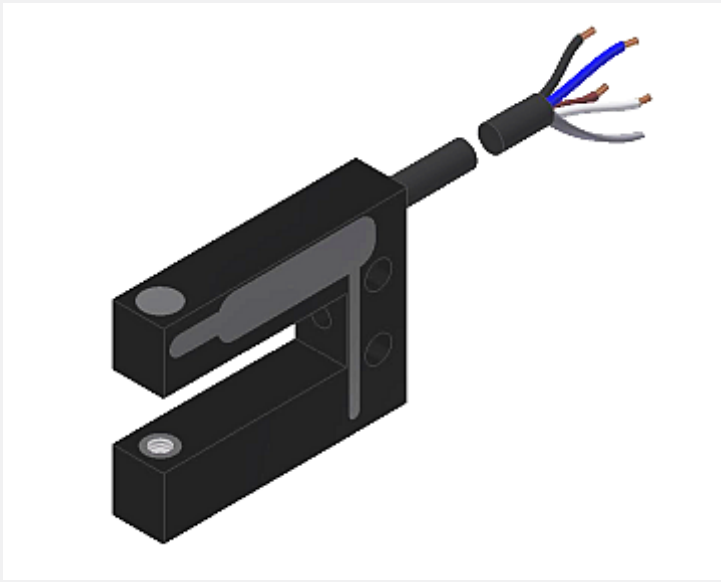

- Visible red laser light
- Class 1 laser product (680 nm, P<0.39 mW)
- Integrated electronics
- Various fork sizes available
- Laser beam typ. Ø 0.2 mm
- Insensitive to dirt accumulation, insensitive to outside light
- Optical long-pass filter
- High switching frequency (typ. 50 kHz)
- Switching state indication (yellow LED)
- Scratch-resistant optics
- Oil-resistant PUR cable (length 500 mm or 1000 mm)
- Sturdy aluminum housing, compact design
- Also available with tool plug (TP, TPO, or TPX)

Design

Product name:

FIA-L-08-d0.2-(fork size)-C-RL-(length)
FIA-L-08-d0.2-(fork size)-C-RL-TP-(length) (with tool plug TP-M12, s. page 4)
FIA-L-08-d0.2-(fork size)-C-RL-TPO-(length) (with tool plug TPO-01, s. page 4)
FIA-L-08-d0.2-(fork size)-C-RL-TPX-(length) (with tool plug TPO-03, s. page 4)

Laser beam diameter:
d0.2 (Ø 0.2 mm)

Available fork sizes: (cf. dimensions page 3)
10/15 (fork width A=10 mm, fork depth B=15 mm)
10/25 (fork width A=10 mm, fork depth B=25 mm)
10/30 (fork width A=10 mm, fork depth B=30 mm)
20/15 (fork width A=20 mm, fork depth B=15 mm)
20/30 (fork width A=20 mm, fork depth B=30 mm)
25/50 (fork width A=25 mm, fork depth B=50 mm)
25/80 (fork width A=25 mm, fork depth B=80 mm)
30/15 (fork width A=30 mm, fork depth B=15 mm)
30/30 (fork width A=30 mm, fork depth B=30 mm)
40/30 (fork width A=40 mm, fork depth B=30 mm)
40/40 (fork width A=40 mm, fork depth B=40 mm)
40/60 (fork width A=40 mm, fork depth B=60 mm)
60/60 (fork width A=60 mm, fork depth B=60 mm)

Available lengths:
500 (cable length = 500 mm)
1000 (cable length = 1000 mm)

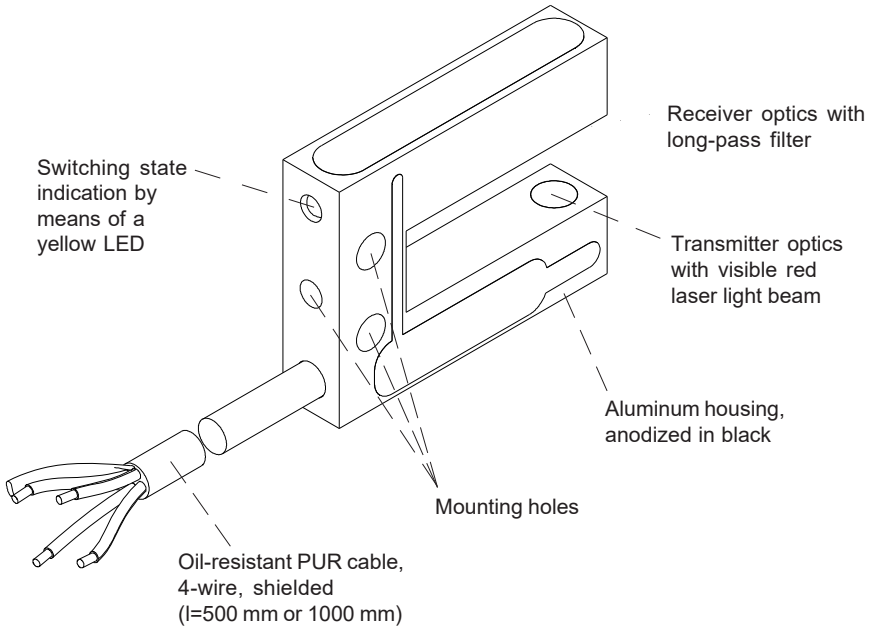

Available also with tool plug, three variants to choose from: (cf. page 4)
TP (tool plug TP-M12 with 4-pole M12 connector, fixed to the sensor cable)
TPO (tool plug TPO-01 with 5-pole connector 680, fixed to the sensor cable)
TPX (tool plug TPO-03 with 7-pole connector 680, fixed to the sensor cable)

Technical Data

Type	FIA-L-08-d0.2-...-C-RL
Light source	Solid state laser 680 nm, DC operation, 0.39 mW max. opt. power, laser class 1 acc. to DIN EN 60825-1. The use of these laser transmitters therefore requires no additional protective measures.
Laser beam	typ. Ø 0.2 mm
Min. detectable object	typ. 0.2 mm
Reproducibility	typ. 5 µm
Optical filter (receiver side)	long-pass filter
Voltage supply	+24VDC (± 10%), reverse polarity protected
Ambient light	up to 5000 Lux
Current consumption	typ. 20 mA
Aperture size (receiver side)	Circular aperture Ø 0.5 mm
Switching outputs (2x)	Q = pnp bright-switching (pnp n.c.) / npn dark-switching (npn n.o.) Qinv = pnp dark-switching (pnp n.o.) / npn bright-switching (npn n.c.) 100mA, short-circuit protection
Enclosure rating	IP67
Operating temperature range	-20°C ... +50°C
Storage temperature range	-20°C ... +85°C
Housing material	Aluminum, anodized in black
Housing dimensions	see page 3
Cable type	Cable integrated in the sensor housing: 4-wire, PUR-sheath, length 500 mm or 1000 mm
EMC test acc. to	DIN EN 60947-5-2 CE
Switching frequency	typ. 50 kHz
Switching state indicator	by means of a yellow LED integrated in the sensor housing: LED on = sensor free LED off = sensor covered

Laser Information

The laser transmitter of FIA-L Series comply with laser class 1 according to EN 60825-1. Under reasonably foreseeable conditions a class 1 laser is safe. The reasonably foreseeable conditions are kept during specified normal operation. The use of these laser transmitters therefore requires no additional protective measures.

The laser transmitter of FIA-L Series are supplied with an information label „CLASS 1 LASER PRODUCT“.



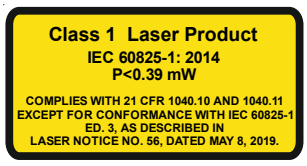

Dimensions

FIA-L-08-d0.2-(fork size)-C-RL-...:

Fork-size	Dim. A	Dim. B
10/15	10 mm	15 mm
10/25	10 mm	25 mm
10/30	10 mm	30 mm
20/15	20 mm	15 mm
20/30	20 mm	30 mm
25/50	25 mm	50 mm
25/80	25 mm	80 mm
30/15	30 mm	15 mm
30/30	30 mm	30 mm
40/30	40 mm	30 mm
40/40	40 mm	40 mm
40/60	40 mm	60 mm
60/60	60 mm	60 mm

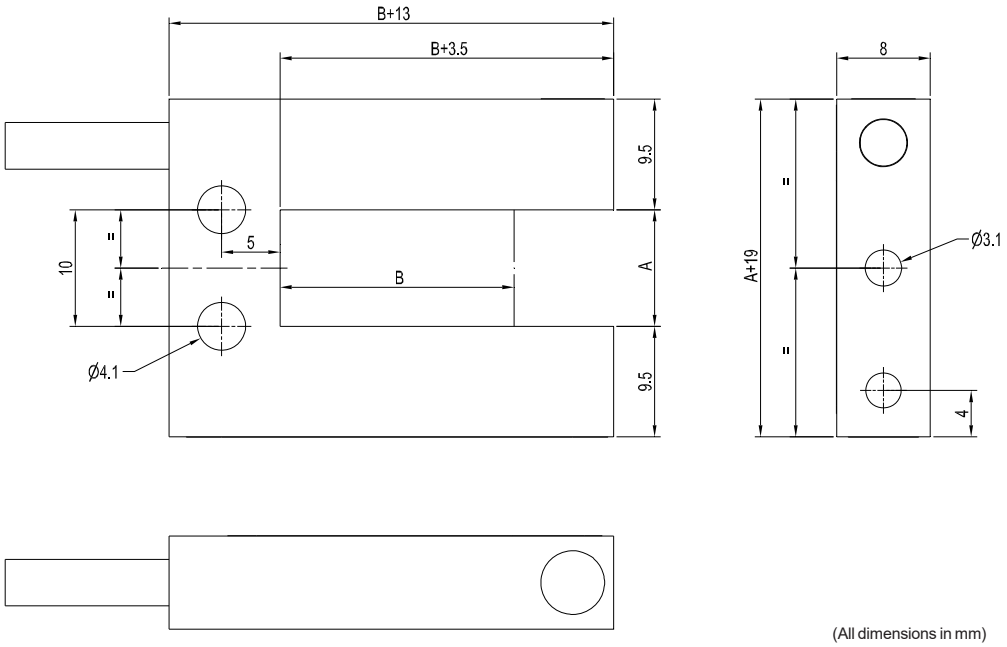

(All dimensions in mm)

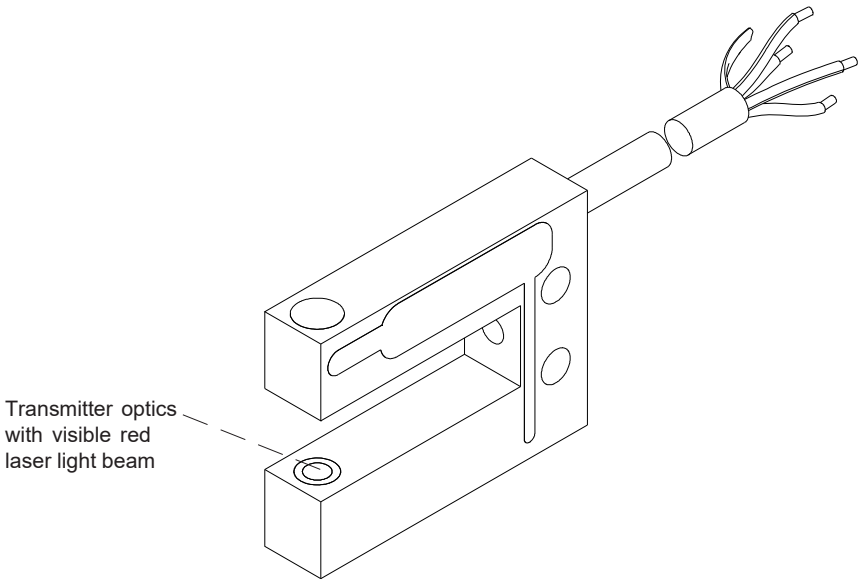

Connector Assignment

Assignment of cable wires of FIA-L-08-d0.2-...-C-RL-...:
(4-wire cable, PUR sheath, shielded):

Color:	Assignment:
Brown	+Ub (+24VDC ± 10%)
White	Qinv (pnp dark-switching, npn bright-switching)
Blue	GND (0V)
Black	Q (pnp bright-switching, npn dark-switching)
Shield	Housing

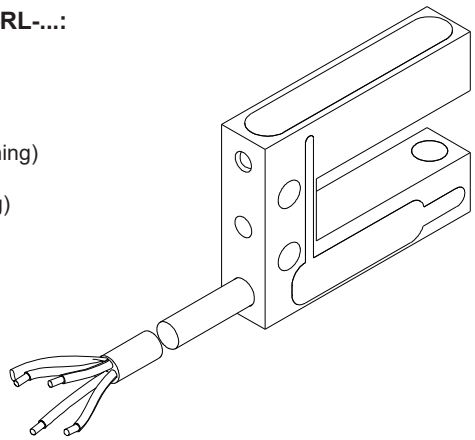

Also available with mounted tool plug, three variants to choose from: "TP", "TPO", or "TPX"

Connector assignment FIA-L-08-d0.2-...-C-RL-TP-...
with tool plug TP-M12
(4-pole connector M12):

Pin:	Assignment:
1	+Ub (+24VDC ± 10%)
2	Output Qinv
3	GND (0V)
4	Output Q

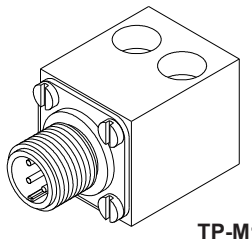

TP-M12

Connector assignment FIA-L-08-d0.2-...-C-RL-TPO-...
with tool plug TPO-01
(5-pole connector Binder 680):

Pin:	Assignment:
1	GND (0V)
2	+Ub (+24VDC ± 10%)
3	Output
4	n.c.
5	Monitoring output

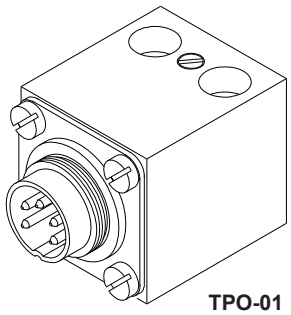

TPO-01

Connector assignment FIA-L-08-d0.2-...-C-RL-TPX-...
with tool plug TPO-03
(7-pole connector Binder 680):

Pin:	Assignment:
1	
2	
3	
4	*(to be determined yet)*
5	
6	
7	

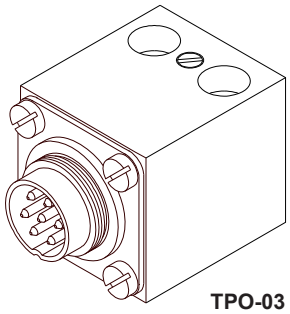

TPO-03

Tool Plugs

Variante "TP":
Tool plug TP-M12:

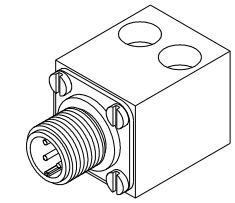

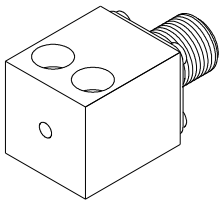

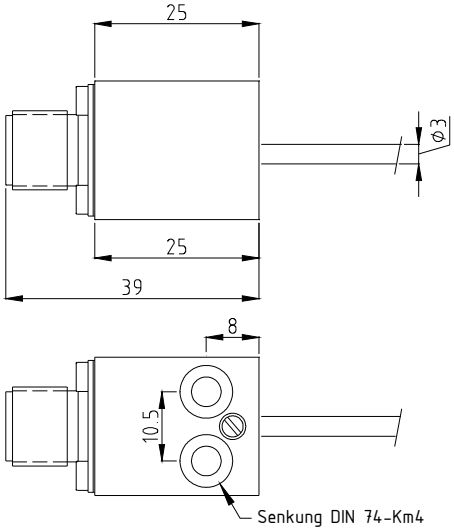

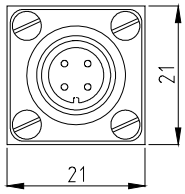

Variante "TPO":
Tool plug TPO-01:

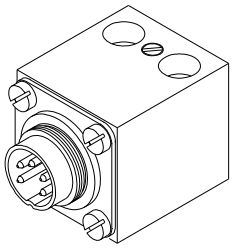

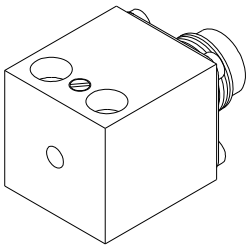

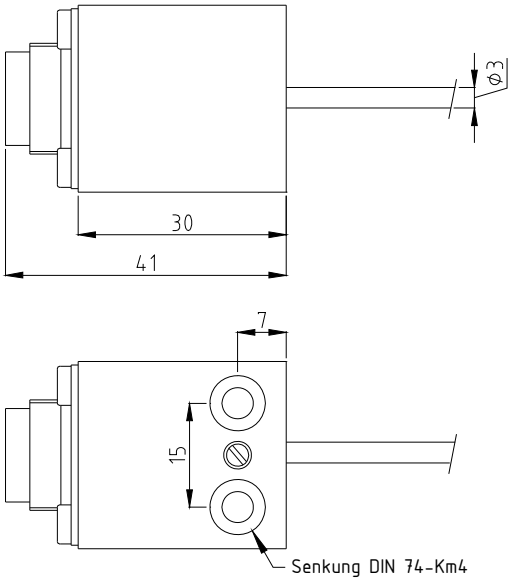

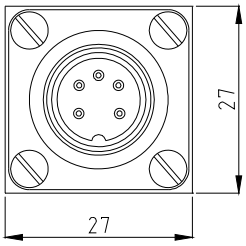

Variante "TPX":
Tool plug TPO-03:

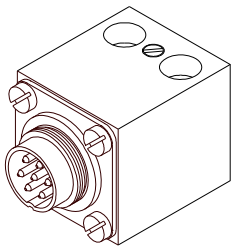

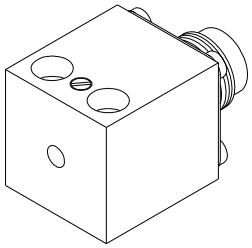

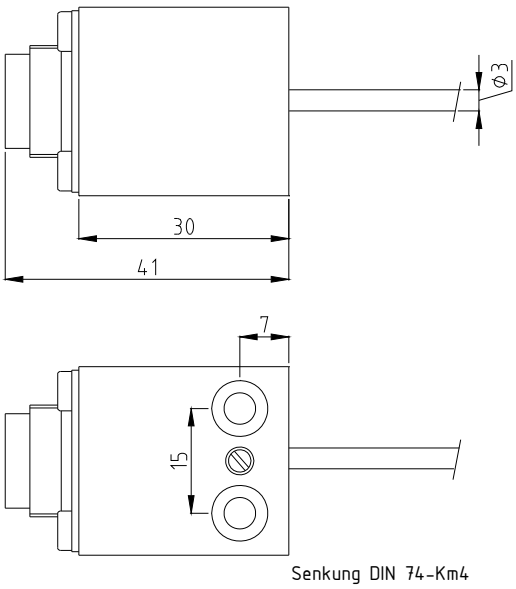

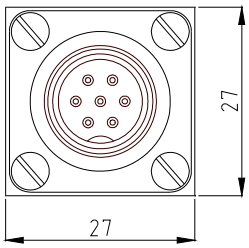

(All dimensions in mm)