FIA Series

FIA-L-06-d0.2-...-P-RL



- Visible red laser light
- Class 1 laser product (680 nm, P<0.39 mW)
- Integrated electronics
- Various fork sizes available
- Laser beam typ. Ø 0.2 mm
- Insensitive to dirt accumulation, insensitive to outside light
- Optical long-pass filter
  High switching frequency (typ. 50 kHz)
- Switching state indication (yellow LED)
- Scratch-resistant optics
- 4-pole M8-connector
- Sturdy aluminum housing, compact design

Design

Product name:

FIA-L-06-d0.2-(fork size)-P-RL

Laser beam diameter:
d0.2 (Ø 0.2 mm)

Available fork sizes: (cf. dimensions page 3)
5/10 (fork width A=5 mm, fork depth B=10 mm)
10/10 (fork width A=10 mm, fork depth B=10 mm)
10/15 (fork width A=10 mm, fork depth B=15 mm)
10/20 (fork width A=10 mm, fork depth B=20 mm)
10/30 (fork width A=10 mm, fork depth B=30 mm)
15/10 (fork width A=15 mm, fork depth B=10 mm)
20/10 (fork width A=20 mm, fork depth B=10 mm)
20/30 (fork width A=20 mm, fork depth B=30 mm)

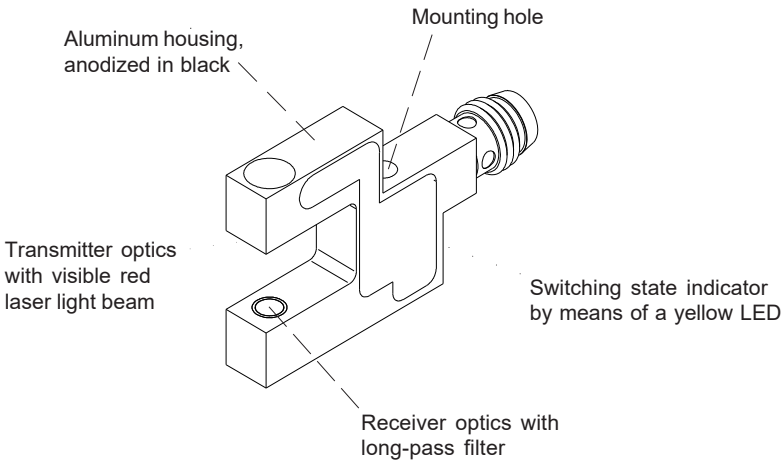

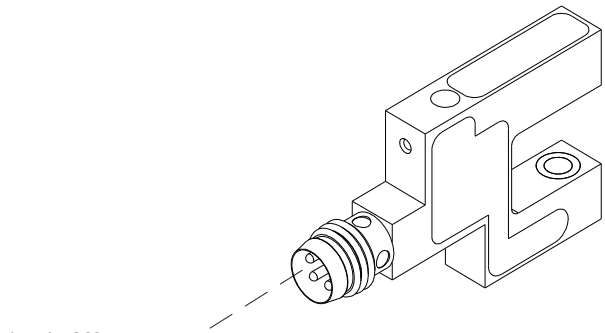

(Connecting cable:
cab-M8/4-..., cf. page 4)

Technical Data

Type	FIA-L-06-d0.2-...-P-RL
Laser	Solid state laser 680 nm, DC operation, 0.39 mW max. opt. power, laser class 1 acc. to DIN EN 60825. The use of these laser transmitters therefore requires no additional protective measures.
Laser beam	typ. Ø 0.2 mm
Min. detectable object	typ. 0.2 mm
Reproducibility	typ. 5 µm
Optical filter (receiver side)	long-pass filter
Voltage supply	+24VDC (± 10%), reverse polarity protected
Ambient light	up to 5000 Lux
Current consumption	typ. 20 mA
Aperture size (receiver side)	Circular aperture Ø 0.5 mm
Switching outputs (2x)	Q = pnp bright-switching (pnp n.c.) / npn dark-switching (npn n.o.) Qinv = pnp dark-switching (pnp n.o.) / npn bright-switching (npn n.c.) 100mA, short-circuit protection
Enclosure rating	IP67
Operating temperature range	-20°C ... +50°C
Storage temperature range	-20°C ... +85°C
Housing material	Aluminum, anodized in black
Housing dimensions	see page 3
Connector type	4-pole M8-connector
EMC test acc. to	DIN EN 60947-5-2 CE
Switching frequency	typ. 50 kHz
Switching state indicator	by means of a yellow LED integrated in the sensor housing LED on = sensor free LED off = sensor covered

Laser Information

The laser transmitter of FIA-L Series comply with laser class 1 according to EN 60825-1. Under reasonably foreseeable conditions a class 1 laser is safe. The reasonably foreseeable conditions are kept during specified normal operation. The use of these laser transmitters therefore requires no additional protective measures.

The laser transmitter of FIA-L Series are supplied with an information label „CLASS 1 LASER PRODUCT“.



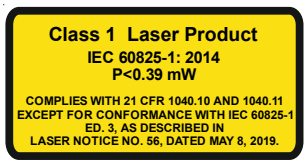

Dimensions

FIA-L-06-d0.2-(fork size)-P-RL:

Fork size	Dim. A	Dim. B
5/10	5 mm	10 mm
10/10	10 mm	10 mm
10/15	10 mm	15 mm
10/20	10 mm	20 mm
10/30	10 mm	30 mm
15/10	15 mm	10 mm
20/10	20 mm	10 mm
20/30	20 mm	30 mm

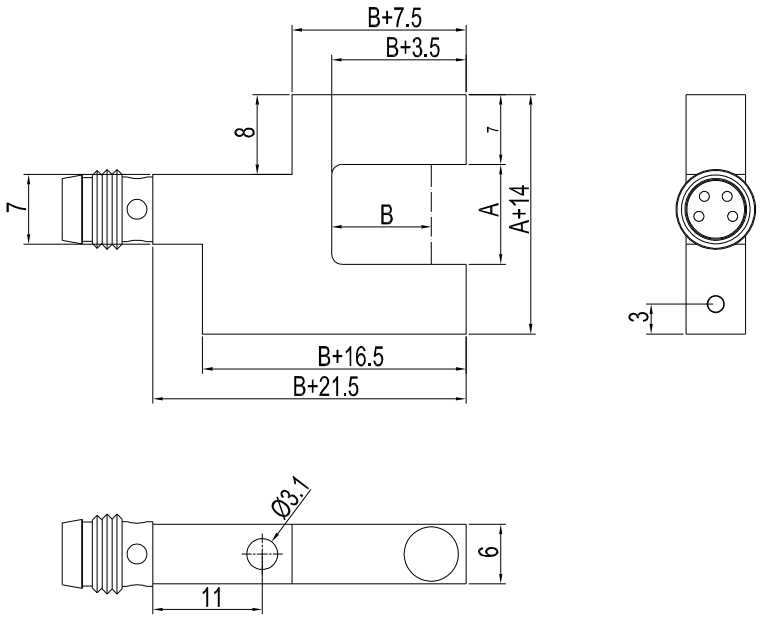

(All dimensions in mm)

Connector Assignment

Connector assignment FIA-L-06-d0.2-...-P-RL:
(4-pole M8-connector)

Pin:	Assignment:
1	+Ub (+24VDC ± 10%)
2	Qinv (pnp dark-switching, npn bright-switching)
3	0V (GND)
4	Q (pnp bright-switching, npn dark-switching)

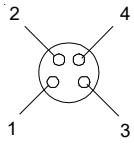

Available connecting cables:

cab-M8/4-g-2 (l=2m)
cab-M8/4-g-5 (l=5m)
cab-M8/4-w-2 (angle type, l=2m)
cab-M8/4-w-5 (angle type, l=5m)

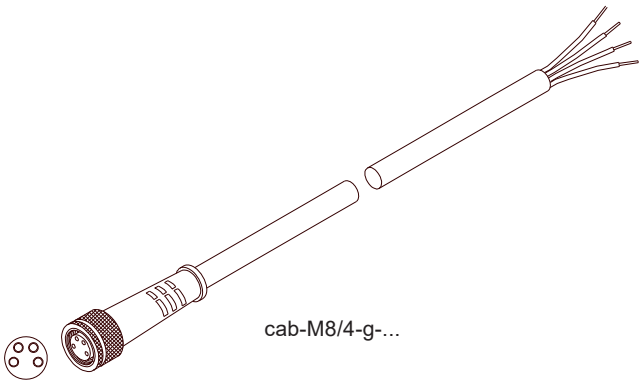

cab-M8/4-g-...

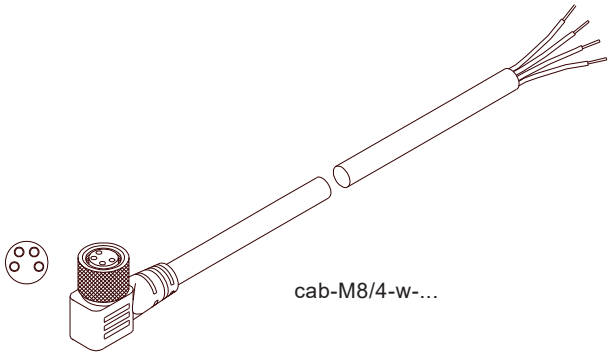

cab-M8/4-w-...