FIA Series

► FIA-...-F

- Integrated electronics
- High sensitivity
- High switching frequency (typ. 500 kHz)
- Infrared light beam (IR LED 905 nm)
- Switching state indicator (two-color LED yellow/green)
- Dirt acculumation indicator (red LED)
- Potentiometer for adjustment of sensitivity
- Scratch-resistant optics
- 4-pole M8-connector
- Sturdy aluminum housing

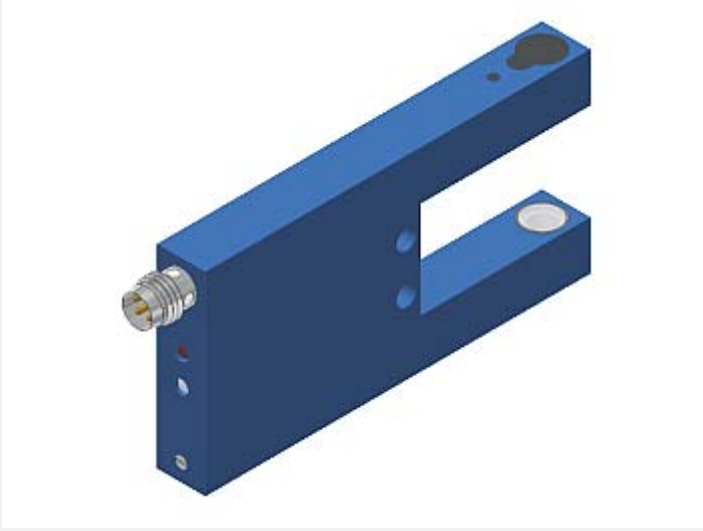

Design

Product name:

FIA-F-(aperture)-(fork size)
FIA-F-(aperture)-(fork size)-TC

Available apertures:
d0.6 (circular aperture Ø 0.6 mm)
d0.8 (circular aperture Ø 0.8 mm)
d1.0 (circular aperture Ø 1.0 mm)
d1.2 (circular aperture Ø 1.2 mm)
d1.5 (circular aperture Ø 1.5 mm)

Available fork sizes: (cf. dimensions page 3)
10/15 (fork width A=10 mm, fork depth B=15 mm)
10/20 (fork width A=10 mm, fork depth B=20 mm)
10/30 (fork width A=10 mm, fork depth B=30 mm)
20/30 (fork width A=20 mm, fork depth B=30 mm)
20/50 (fork width A=20 mm, fork depth B=50 mm)
25/60 (fork width A=25 mm, fork depth B=60 mm)
25/80 (fork width A=25 mm, fork depth B=80 mm)
30/15 (fork width A=30 mm, fork depth B=15 mm)
30/30 (fork width A=30 mm, fork depth B=30 mm)
50/30 (fork width A=50 mm, fork depth B=30 mm)

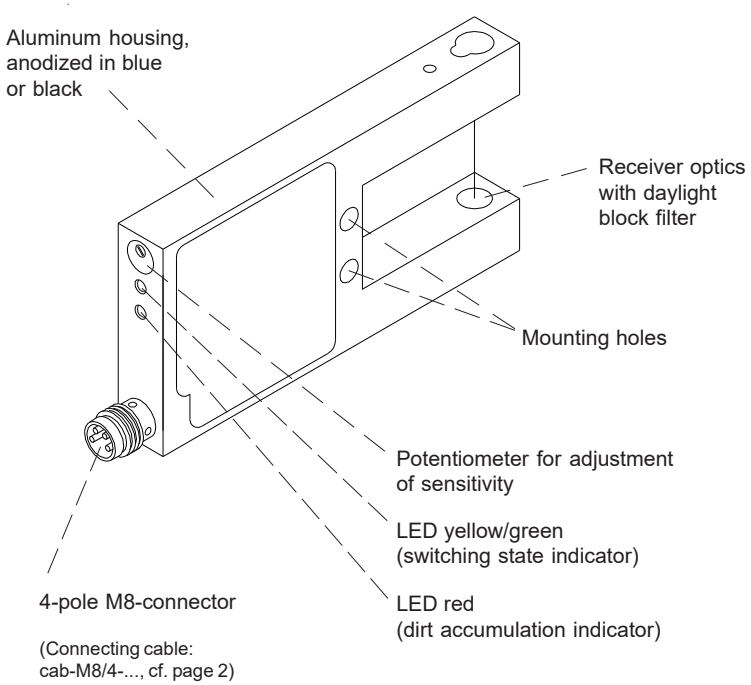

available also with switching threshold correction:
TC (threshold correction)

Technical Data

Type	FIA-F
Transmitter	IR LED: 905 nm
Min. detectable object	typ. 0.01 mm
Reproducibility	typ. 0.005 mm
Optical filter	Daylight block filter
Voltage supply	+24VDC (± 10%), reverse polarity protected
Ambient light	up to 5000 Lux
Current consumption	typ. 80 mA
Aperture size	Circular aperture Ø 0.6 mm / Ø 0.8 mm / Ø 1.0 mm / Ø 1.2 mm / Ø 1.5 mm
Switching output	Pin 2: Output Qinv (pnp dark-switching = pnp n.o. / npn bright-switching = npn n.c.) Pin 4: Output Q (pnp bright-switching = pnp n.c. / npn dark-switching = npn n.o.) 100 mA, short circuit proof
Enclosure rating	IP67
Operating temperature range	-20°C ... +70°C
Storage temperature range	-20°C ... +85°C
Housing	Aluminum, anodized in blue or black
Housing dimensions	see page 3
Connector type	4-pole M8-connector
EMC test acc. to	DIN EN 60947-5-2 CE
Switching state indicator	yellow/green LED
Dirt accumulation indicator	red LED
Potentiometer	for sensitivity setting
Switching frequency	typ. 500 kHz

Connector Assignment

Pin assignment
(4-pole M8-connector)

Pin:	Assignment:
1	+Ub (+24VDC ± 10%)
2	Output Qinv (pnp dark-switching = pnp n.o. / npn bright-switching = npn n.c.)
3	0V (GND)
4	Output Q (pnp bright-switching = pnp n.c. / npn dark-switching = npn n.o.)

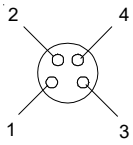

Available connecting cables:

cab-M8/4-g-2 (l=2m)
cab-M8/4-g-5 (l=5m)
cab-M8/4-w-2 (angle type, l=2m)
cab-M8/4-w-5 (angle type, l=5m)

Dimensions

Fork size	dim. A	dim. B
10/15	10 mm	15 mm
10/20	10 mm	20 mm
10/30	10 mm	30 mm
20/30	20 mm	30 mm
20/50	20 mm	50 mm
25/60	25 mm	60 mm
25/80	25 mm	80 mm
30/15	30 mm	15 mm
30/30	30 mm	30 mm
50/30	50 mm	30 mm

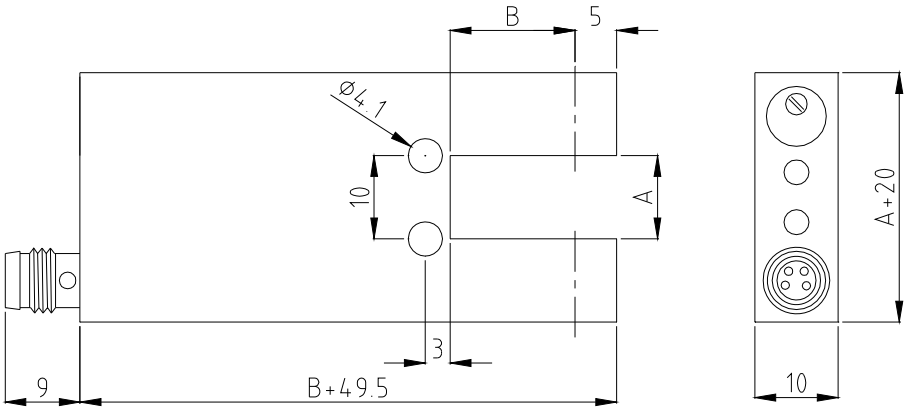

(All dimensions in mm)

Setting

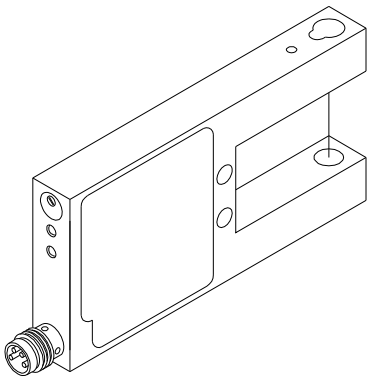

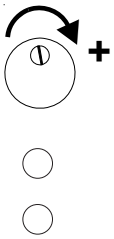

Potentiometer for adjustment of sensitivity
Increase of sensitivity: Rotation clockwise
(3-revolutions potentiometer)

LED yellow/green (switching state indicator)
LED yellow = sensor covered
LED green = sensor free

LED red (dirt accumulation indicator)
LED red = sensor dirty
LED off = sensor not dirty

Connecting Cables

cab-M8/4-g-2 (l=2m)
cab-M8/4-g-5 (l=5m)
cab-M8/4-w-2 (angle type, l=2m)
cab-M8/4-w-5 (angle type, l=5m)

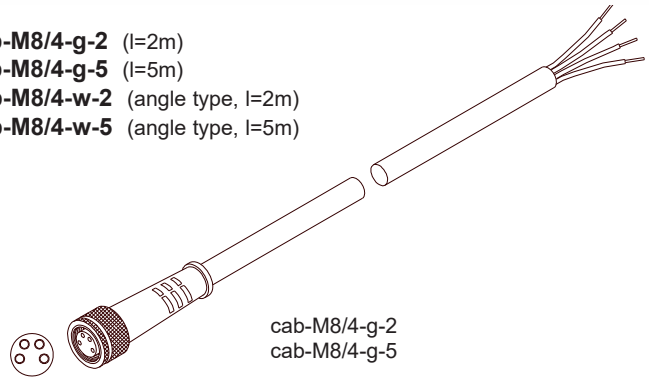

cab-M8/4-g-2
cab-M8/4-g-5

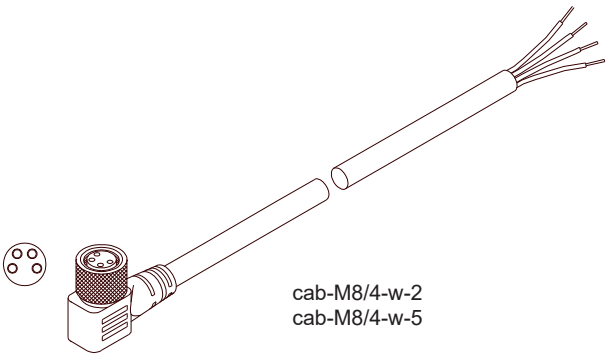

cab-M8/4-w-2
cab-M8/4-w-5