F-LAS Series

F-LAS-LBL-...-HAMP (High Amplification)

Label detection

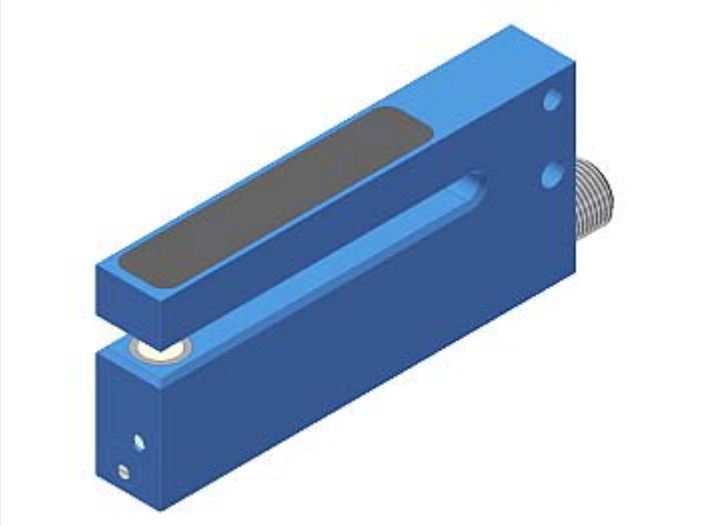

- Collimated, visible red laser beam (<1 mW, 670 nm), **laser class 2**
- Enables very exact positioning of labels
- Detection of transparent labels on transparent base material
- Potentiometer for adjustment of gain
- Bicolor LED for switching state indication
- High switching frequency (25 kHz)
- Various apertures available

Design

Product name:

F-LAS-LBL-(aperture)-Q-HAMP
F-LAS-LBL-(aperture)-Qinv-HAMP

Available apertures:
3x0.3 (rectangular aperture AxB 3 mm x 0.3 mm)
3x0.5 (rectangular aperture AxB 3 mm x 0.5 mm)

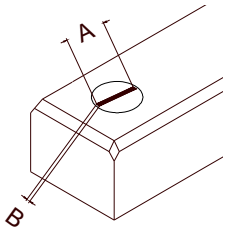

Switching output:
Q (pnp bright-switching = pnp n.c. and npn dark-switching = npn n.o.)
Qinv (pnp dark-switching = pnp n.o. and npn bright-switching = npn n.c.)

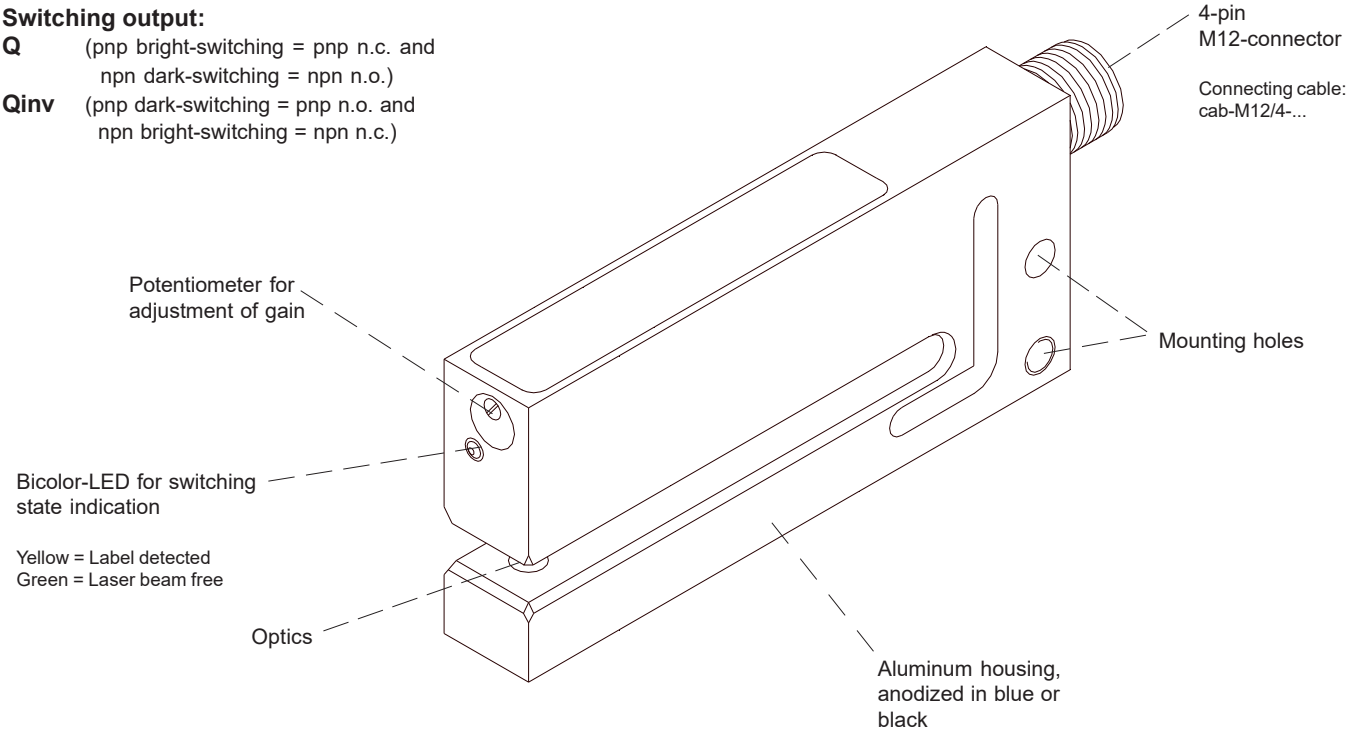

Technical Data

Model	F-LAS-LBL-...-HAMP (High Amplification)
Laser	Semiconductor laser, 670 nm, 1mW max. optical power, laser class II acc. to DIN EN 60825-1. The use of these laser light barriers therefore requires no additional protective measures.
Reproducibility	Analog typ. 5% of aperture size, digital typ. 3% of aperture size
Optical filter	Interference filter and polarisation filter
Digital output	Type Q: pnp bright-switching (pnp , npn dark-switching Type Qinv: pnp dark-switching, npn bright-switching
Analog output	0V ... +10V
Band width analog signal	100 kHz (-3 dB)
Voltage supply	+12VDC ... +32VDC, reverse-polarity protected, overcurrent protected
Operation	Constant light operation
Ambient light	Up to 5000 Lux (depends on the aperture used)
Enclosure rating	IP67
Current consumption	typ. 90 mA
Available aperture sizes	Rectangular aperture: 3 mm x 0.3 mm or 3 mm x 0.5 mm
Potentiometer	Adjustment of gain factor by means of an integrated 3-revolutions potentiometer
Operating temperature range	-20°C ... +50 °C
Storage temperature range	-20°C ... +85°C
Housing material	Aluminum, anodized in blue or black
Housing dimensions	approx. 90 mm x 40 mm x 14 mm
Type of connector	4-pin M12-connector
EMC test acc. to	DIN EN 60947-5-2 CE
Switching frequency	typ. 25 kHz
Switching state indication	by means of an integrated bicolor LED (yellow/green)

Laser Warning

The transmitters of the laser one-way light barriers of series F-LAS comply with laser class 2 according to EN 60825-1. The use of these laser transmitters therefore requires no additional protective measures.

The light barriers of the F-LAS Series are supplied with a laser warning label.





Dimensions

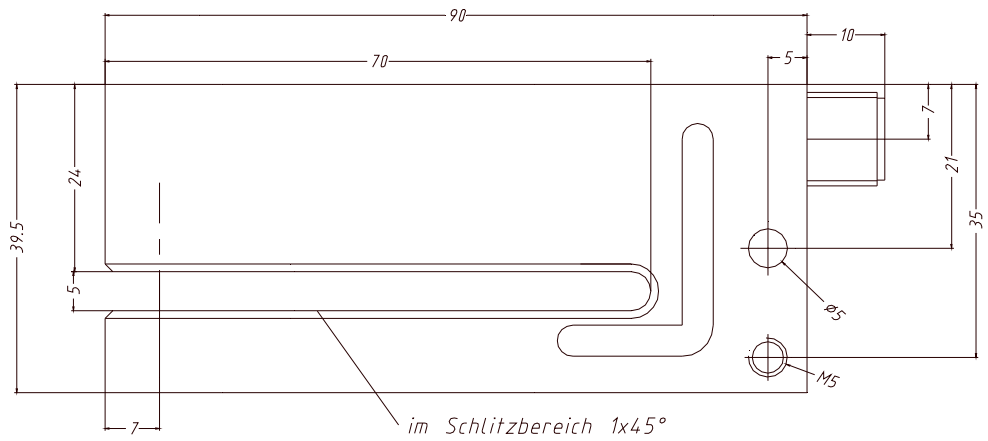

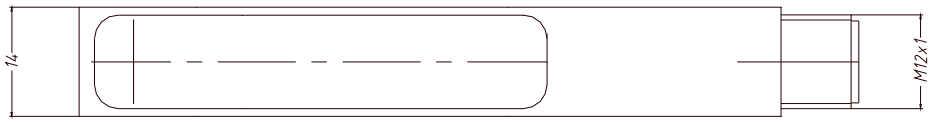

(All dimensions in mm)

Setting

Bicolor LED:

Yellow = Label detected
Green = Laser beam free

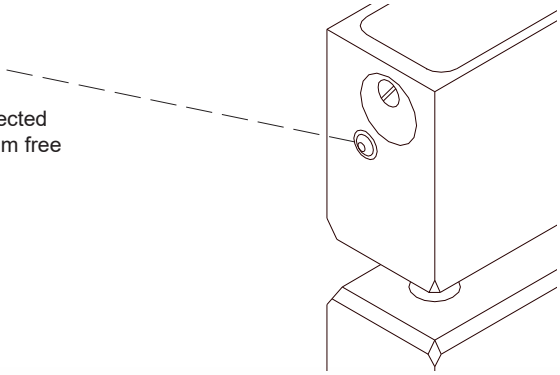

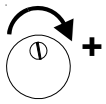

Potentiometer for adjustment of gain:
(3-revolutions potentiometer)

Increase of analog voltage:
Rotation clockwise

Connector Assignment

F-LAS-LBL-...-Q-HAMP

(4-pin M12-connector):

Pin:	Color:	Assignment:
1	brown	+Ub (+12VDC ... +32VDC)
2	white	ANA (0 ... +10V)
3	blue	0V (GND)
4	black	Output Q (pnp bright-switching = pnp n.c. / npn dark-switching = npn n.o.)

F-LAS-LBL-...-Qinv-HAMP

(4-pin M12-connector):

Pin:	Color:	Assignment:
1	brown	+Ub (+12VDC ... +32VDC)
2	white	ANA (0 ... +10V)
3	blue	0V (GND)
4	black	Output Qinv (pnp dark-switching = pnp n.o. / npn bright-switching = npn n.c.)

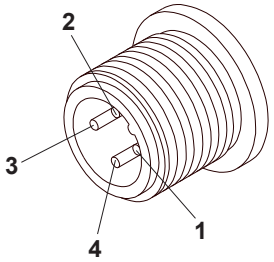

Connecting Cables

Available connecting cables:

cab-M12/4-g-2m (l=2m, outer jacket PUR)
cab-M12/4-g-5m (l=5m, outer jacket PUR)
cab-M12/4-w-2m (angle type 90°, l=2m, outer jacket PUR)
cab-M12/4-w-5m (angle type 90°, l=5m, outer jacket PUR)

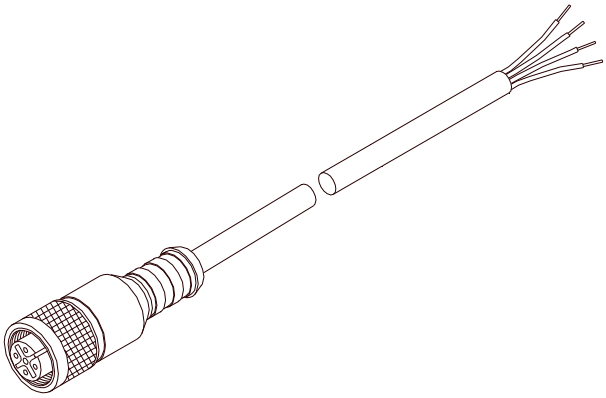

cab-M12/4-g-...



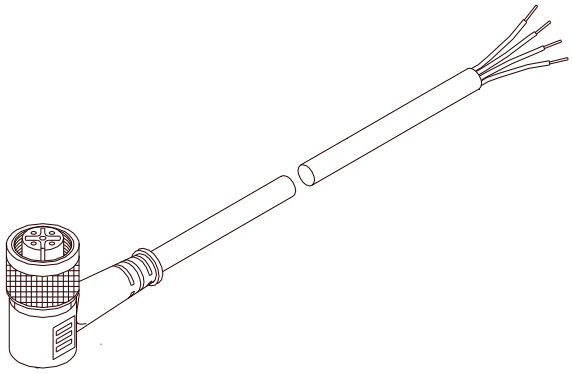

cab-M12/4-w-...

