F-LAS Series

➤ F-LAS-16-AC-...

- Collimated, visible red laser beam, according to selected aperture size:
  Laser class 1 (<0.39 mW, 670 nm) or
  Laser class 2 (<1 mW, 670 nm)
- AC operation
- Switching frequency typ. 1 kHz
- Various fork sizes and aperture sizes available
- Potentiometer either for gain setting or
  for adjustment of comparator threshold
- Analog output (0 ... +10V)
- 4-pole M12-connector
- Scratch-resistant optics, sturdy aluminum housing, IP67

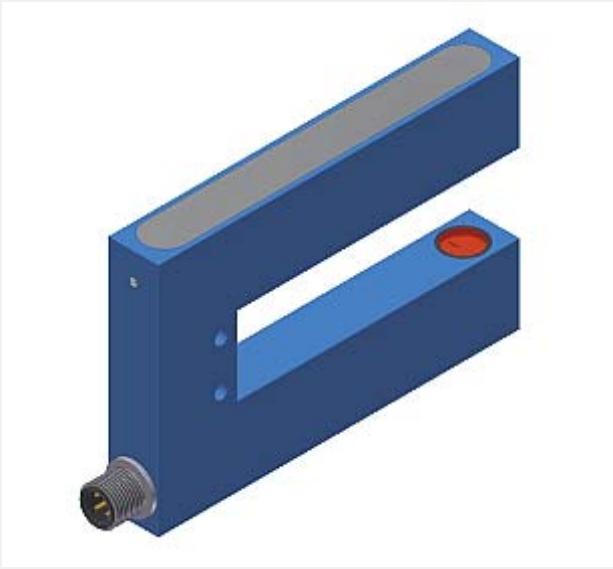

Design

Product name:

F-LAS-16-AC-(fork size)-(aperture)-(potentiometer)-(output)

Available apertures:
Rectangular apertures (AxB):

0.2x5	(0.2 mm x 5 mm)
1.5x5	(1.5 mm x 5 mm)
0.2x9.5	(0.2 mm x 9.5 mm)
0.3x9.5	(0.3 mm x 9.5 mm)
0.5x3	(0.5 mm x 3 mm)
0.8x9.5	(0.8 mm x 9.5 mm)
1.5x9.5	(1.5 mm x 9.5 mm)
2.5x9.5	(2.5 mm x 9.5 mm)
3x0.5	(3 mm x 0.5 mm)
5x0.2	(5 mm x 0.2 mm)
5x1.5	(5 mm x 1.5 mm)
9.5x0.2	(9.5 mm x 0.2 mm)
9.5x0.3	(9.5 mm x 0.3 mm)
9.5x0.8	(9.5 mm x 0.8 mm)
9.5x1.5	(9.5 mm x 1.5 mm)
9.5x2.5	(9.5 mm x 2.5 mm)

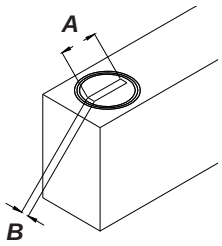

Available fork sizes:

25/80	(fork width A=25 mm, fork depth B=80 mm)
80/40	(fork width A=80 mm, fork depth B=40 mm)
80/65	(fork width A=80 mm, fork depth B=65 mm)
80/80	(fork width A=80 mm, fork depth B=80mm)
150/80	(fork width A=150 mm, fork depth B=80 mm)

Potentiometer:

A	(Potentiometer for adjustment of gain)
T	(Potentiometer for adjustment of comparator threshold)

Switching output:

Q	(pnp bright-switching = pnp n.c. / npn dark-switching = npn n.o.)
Qinv	(pnp dark-switching = pnp n.o. / npn bright-switching = npn n.c.)

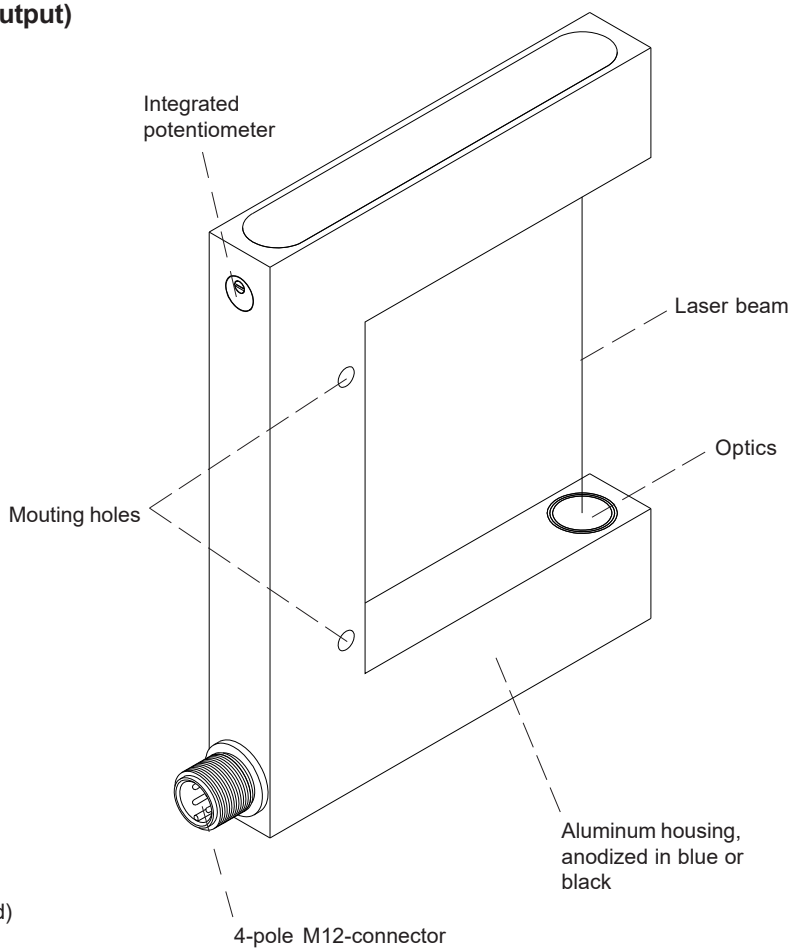

Connecting cable:
cab-M12/4-g-...

Technical Data

Type	F-LAS-16-AC-...
Laser	With aperture size 0.2x5, 0.2x9.5, 0.3x9.5, 0.5x3, 0.8x9.5, 3x0.5, 5x0.2, 9.5x0.2, 9.5x0.3, 9.5x0.8: Semiconductor laser, 670 nm, 0.39 mW max. optical power, laser class 1 acc. to DIN EN 60825-1. The use of these laser light barriers therefore requires no additional protective measures. With aperture size 1.5x5, 1.5x9.5, 2.5x9.5, 5x1.5, 9.5x1.5, 9.5x2.5: Semiconductor laser, 670 nm, 1 mW max. optical power, laser class 2 acc. to DIN EN 60825-1. The use of these laser light barriers therefore requires no additional protective measures.
Available aperture sizes	Rectangular apertures: 0.2 mm x 5 mm to 9.5 mm x 2.5 mm (cf. page 1)
Optical filters	Interference filter and red light filter RG 630
Min. detectable object	typ. 1% of aperture size
Reproducibility	typ. 1% of aperture size
Voltage supply	+12VDC ... +32VDC, reverse-polarity protected, overcurrent protected
Ambient light	up to 5000 Lux
Operation mode	AC operation, 100 kHz
Current consumption	typ. 60 mA
Max. switching current	100 mA, short-circuit protected
Digital output (1x)	Q = pnp bright-switching (pnp n.c.) / npn dark-switching (npn n.o.) or Qinv = pnp dark-switching (pnp n.o.) / npn bright-switching (npn n.c.) 100mA, short-circuit protection
Analog output (1x)	0 ... +10V
Potentiometer	either for adjustment of gain factor (A) or for adjustment of comparator threshold (T)
Switching frequency	typ. 1 kHz
Operating temperature range	-20°C ... +50 °C
Storage temperature range	-20°C ... +85°C
Housing material	Aluminum, anodized in blue or black
Housing dimensions	cf. page 4
Type of connector	4-pole M12-connector
Enclosure rating	IP67
EMC test acc. to	DIN EN 60947-5-2 CE

Laser Warning

Laser class 1
is true for the following aperture sizes:

0.2x5, 0.2x9.5, 0.3x9.5, 0.5x3, 0.8x9.5, 3x0.5, 5x0.2, 9.5x0.2, 9.5x0.3, 9.5x0.8

In case that an aperture as listed above is used, the laser transmitters of F-LAS-16-AC series comply with laser class 1 according to EN 60825-1. Under reasonably foreseeable conditions a class 1 laser is safe. The reasonably foreseeable conditions are kept during specified normal operation. The use of these laser transmitters therefore requires no additional protective measures.

These laser transmitters of F-LAS-16-AC series series are supplied with an information label „CLASS 1 Laser Product“.

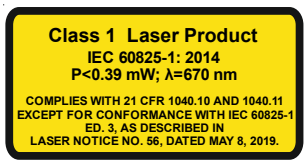



Laser class 2
is true for the following aperture sizes:

1.5x5, 1.5x9.5, 2.5x9.5, 5x1.5, 9.5x1.5, 9.5x2.5

In case that an aperture as listed above is used, the laser transmitters of F-LAS-16-AC series comply with laser class 2 according to EN 60825-1. The use of these laser transmitters therefore requires no additional protective measures.

These laser transmitters of the F-LAS-16-AC Series are supplied with a laser warning label.





Dimensions

Type	Fork width (Dim. A)	Fork depth (Dim.B)
F-LAS-16-AC-25/80-...	25 mm	80 mm

(further dimensions see next page)

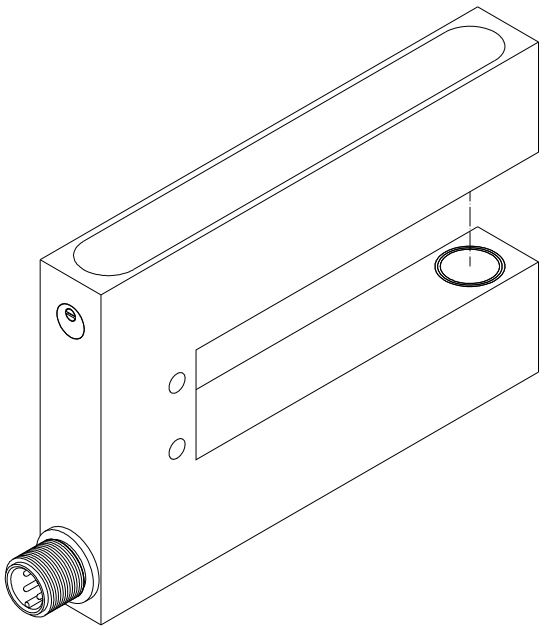

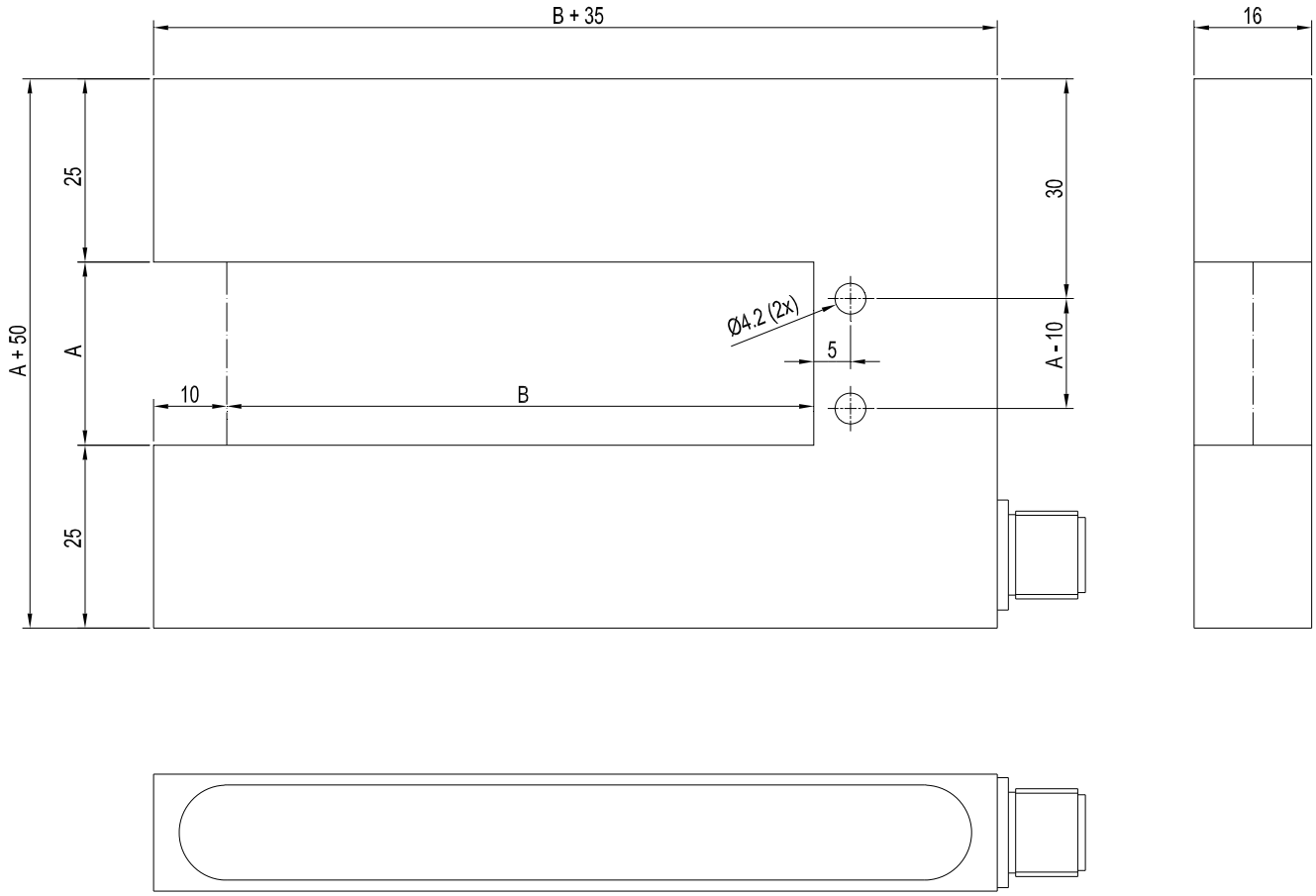

(All dimensions in mm)

Dimensions

Type	Fork width (Dim. A)	Fork depth (Dim.B)
F-LAS-16-AC-80/40-...	80 mm	40 mm
F-LAS-16-AC-80/65-...	80 mm	65 mm
F-LAS-16-AC-80/80-...	80 mm	80 mm
F-LAS-16-AC-150/80-...	150 mm	80 mm

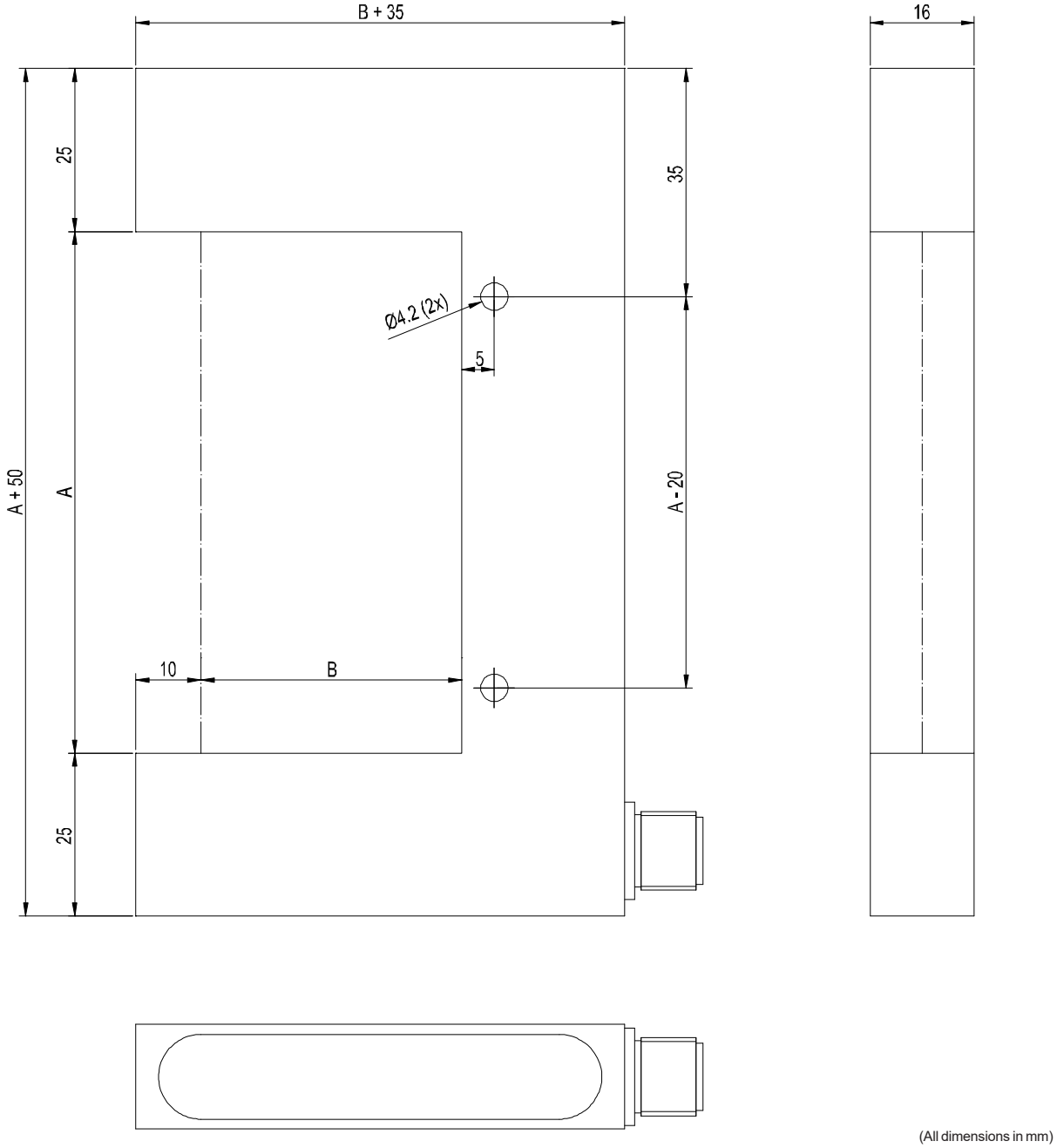

(All dimensions in mm)

Setting

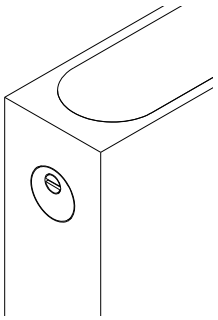

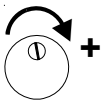

Setting of potentiometers A respectively T:

Potentiometer for adjustment of gain (A)
Rotation clockwise: Increase of analog voltage

Potentiometer for adjustment of comparator threshold (T)
Rotation clockwise: Increase of threshold

Connector Assignment

F-LAS-16-AC-...-Q
(4-pole M12-connector):

Pin:	Color:	Assignment:
1	brown	+Ub (+12VDC ... +32VDC)
2	white	ANALOG (0 ... +10V)
3	blue	0V (GND)
4	black	Output Q (pnp bright-switching = pnp n.c. / npn dark-switching = npn n.o.)

F-LAS-16-AC-...-Qinv
(4-pole M12-connector):

Pin:	Color:	Assignment:
1	brown	+Ub (+12VDC ... +32VDC)
2	white	ANALOG (0 ... +10V)
3	blue	0V (GND)
4	black	Output Qinv (pnp dark-switching = pnp n.o. / npn bright-switching = npn n.c.)

Connecting Cables

Available connecting cables:

cab-M12/4-g-2m	(l=2m, outer jacket PUR)
cab-M12/4-g-5m	(l=5m, outer jacket PUR)
cab-M12/4-w-2m	(angle type 90°, l=2m, outer jacket PUR)
cab-M12/4-w-5m	(angle type 90°, l=5m, outer jacket PUR)
cab-M12/4-g-2m-shd	(l=2m, shielded, outer jacket PUR
cab-M12/4-g-5m-shd	(l=5m, shielded, outer jacket PUR)
cab-M12/4-w-2m-shd	(angle type 90°, l=2m, shielded, outer jacket PUR)
cab-M12/4-w-5m-shd	(angle type 90°, l=5m, shielded, outer jacket PUR)

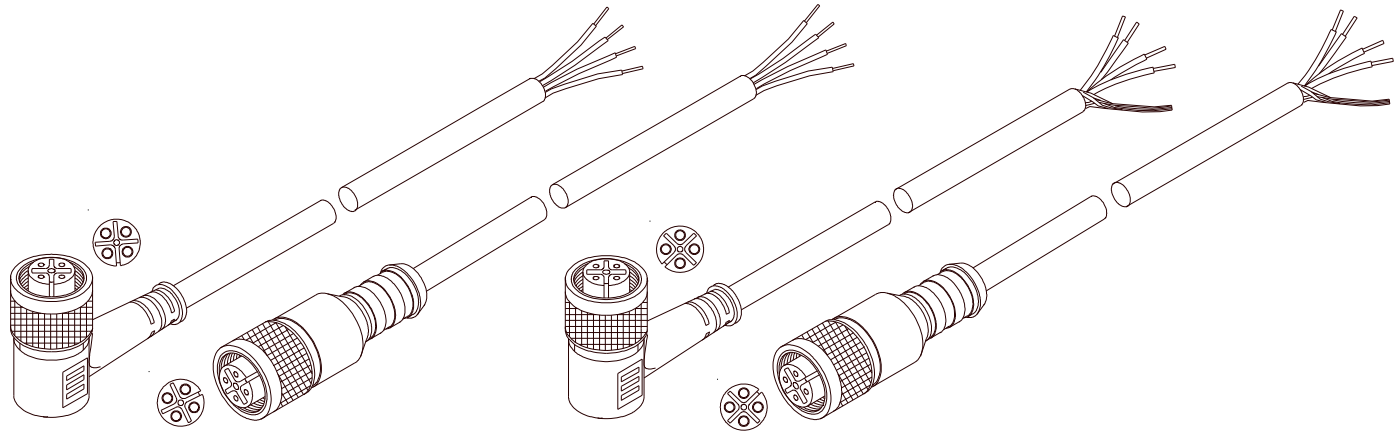

cab-M12/4-w-... cab-M12/4-g-... cab-M12/4-w-...-shd cab-M12/4-g-...-shd