# SPECTRO Series

## SPECTRO-3-FIO-JR-4X

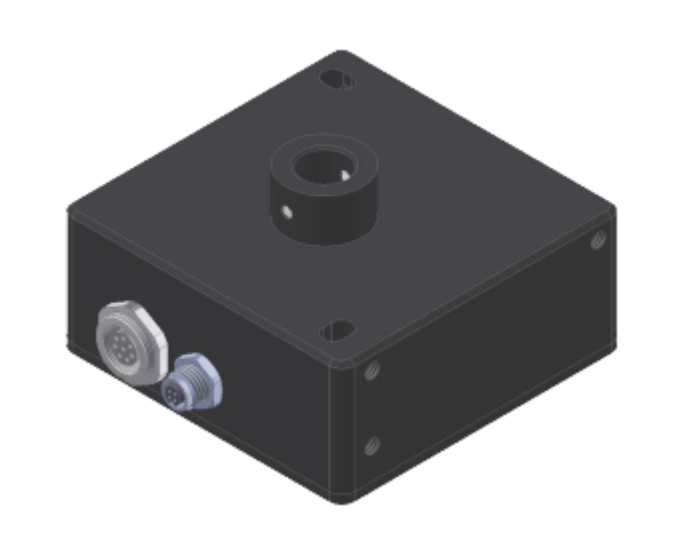

This color sensor is used to check “self-illuminating” devices (such as LEDs, halogen lamps, displays, ...) for color and brightness.

- Checking LEDs for differences in intensity
- Checking LEDs for differences in color
- Checking two-color and three-color LEDs
- Up to 31 colors can be stored
- RS232 interface (USB or Ethernet converter is available)
- OFF MODE operation (for recognizing “self-illuminators”)
- Scan frequency max. 35 kHz
- Switching frequency max. 40 kHz
- TEACH via PC or PLC (external input)
- Various evaluation algorithms can be activated
- “BEST HIT“ mode (“human color assessment“)
- Parameterizable via Windows® software, scope function
- Averaging can be activated (from 1 up to over 32000 values)
- 3-color filter detector (true color detector: “human color perception“)
- Inspection at four different positions using a fanned-out light guide head R-P-AP1.0-800-4X-Ms (four light guides are combined into a bundle)

## Design

**Product name:**

**SPECTRO-3-FIO-JR-4X**
(incl. Windows® PC software SPECTRO3-Scope)

**Accessories:** (p. 4, 9)

**R-P-AP1.0-800-4X-Ms**
(optical fiber head with 4 optical fiber frontends)
**MOUNT-SPECTRO-3-JR/CL**
(Monunting unit)

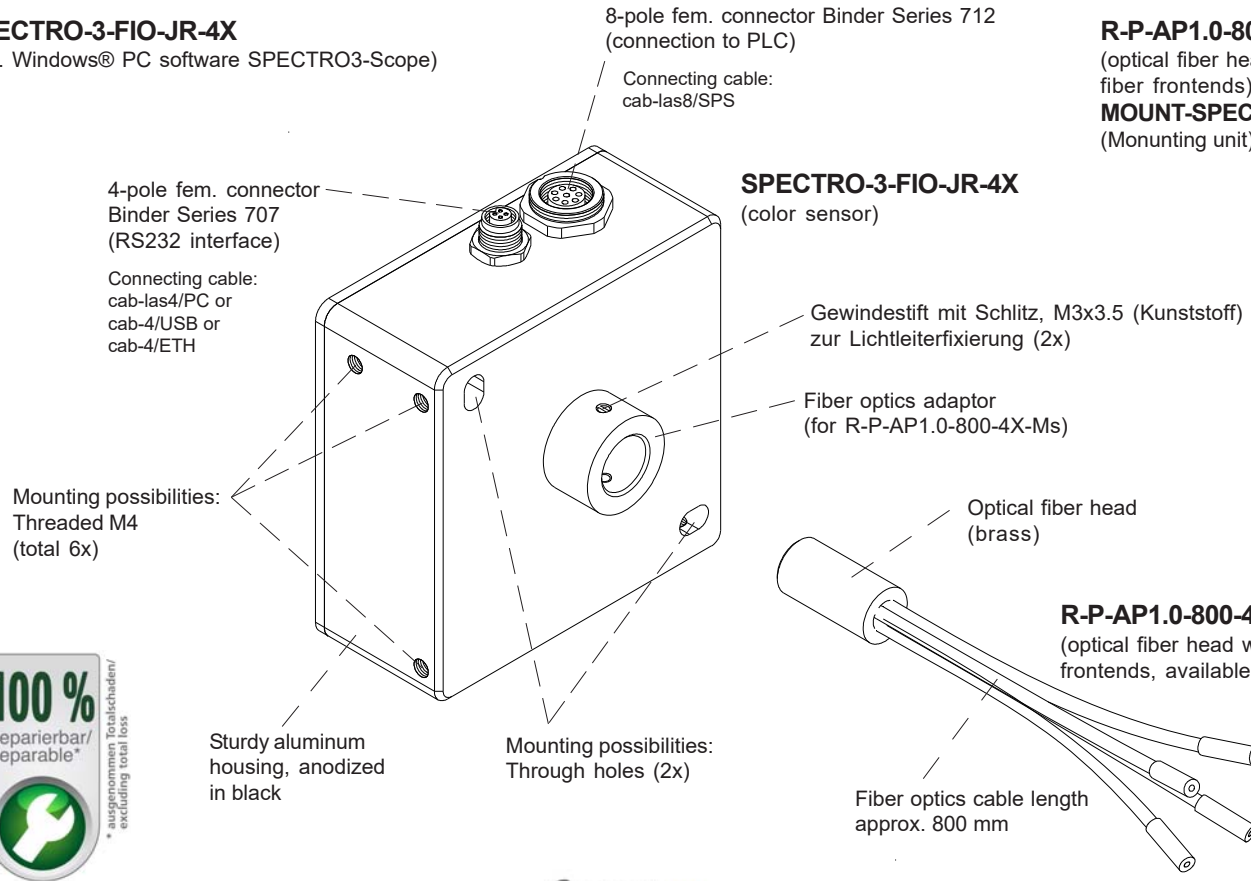


100 % reparierbar/ reparable*
* ausgenommen Totalschaden/ excluding total loss

## Technical Data

| Model | SPECTRO-3-FIO-JR-4X |
|---|---|
| Voltage supply | +24VDC (± 10%), reverse polarity protected, overcurrent protected |
| Current consumption | < 160 mA |
| Max. switching current | 100 mA, short circuit proof |
| Input digital (1x) | IN0 (Pin 3), digital (0V/+24V) |
| Outputs digital (5x) | OUT0 ... OUT4 (Pin 4 ... 8): digital (0V/+24V), npn-/pnp-able (bright-/dark-switching, can be switched) |
| Interface | RS232, parameerizable under Windows® |
| Pulse lengthening | 0 ... 100 ms, adjustable via PC software |
| Averaging | max. 32768 values, adjustable via PC software |
| Scan frequency | max. 35 kHz (depends on parameterization) |
| Switching frequency | max. 40 kHz |
| Light source | the object being measured serves as the light source |
| Receiver | 3-color filter detector (TRUE COLOR detector, “human color perception“), color filter curves acc. to CIE 1931 |
| Receiver gain setting | 8 steps (AMP1 ... AMP8), adjustable via PC software |
| Reproducibility | in the X, Y color range each 1 digit at 12-bit A/D conversion<br>(depending on the averaging method used and the light source to be measured) |
| Temperature drift X,Y | ΔX/ΔT; ΔY/ΔT typ. 0,2 digits/°C (< 0,01% / °C) |
| Color difference | ΔE >= 0,5 |
| Color space | X Y INT siM (Lab) |
| Color memory capacity | non-volatile EEPROM with parameter sets for max. 31 colors |
| Housing dimensions | LxWxH approx. 65 mm x 65 mm x 38 mm (incl. fiber optics adapter, without flange connectors) |
| Housing material | aluminum, anodized in black |
| Enclosure rating | IP64 |
| Connecting cables | to PLC: cab-las8/SPS or cab-las8/SPS-w<br>to PC/RS232 interface: cab-las4/PC or cab-las4/PC-w<br>to PC/USB interface: cab-4/USB or cab-4/USB-w<br>to PC/Ethernet interface: cab-4/ETH |
| Type of connector | connection to PLC: 8-pole fem. connector (Binder 712),<br>connection to PC: 4-pole fem. connector (Binder 707) |
| Operating temp. range | -20°C ... +55°C |
| Storage temperature range | -20°C ... +85°C |
| EMC test acc. to | DIN EN 60947-5-2 CE |
| Type of fiber optics | R-P-AP1.0-800-4X-Ms (optical fiber head with 4 optical fiber frontends),<br>available separately |

## Dimensions

**SPECTRO-3-FIO-JR-4X** (color sensor)

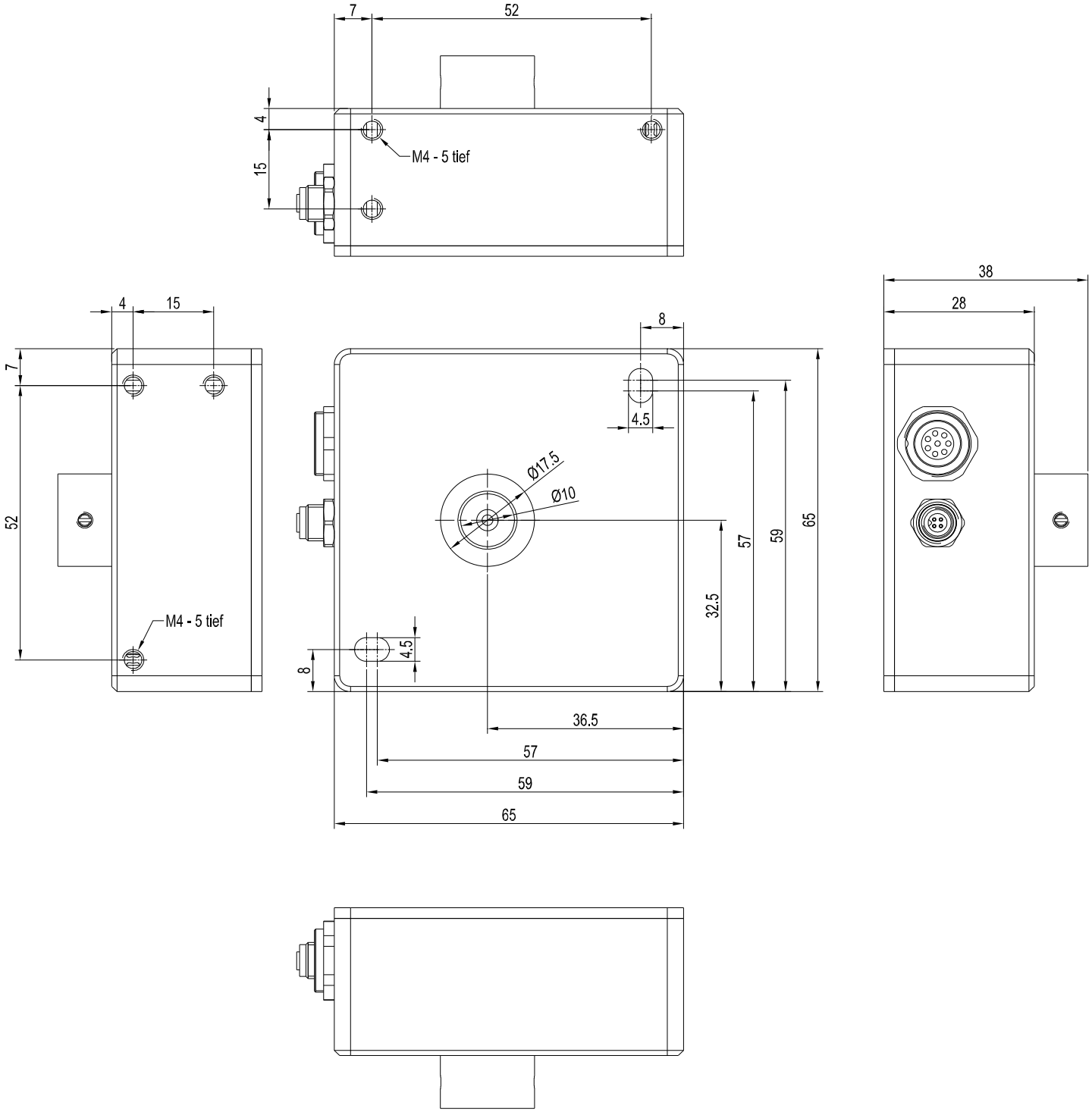


All dimensions in mm

## Fiber Optics

**R-P-AP1.0-800-4X-Ms** (optical fiber head with 4 optical fiber frontends)
(please order separately)

With the help of the special fiber optics R-P-AP1.0-800-4X-Ms, up to four LEDs located in different places can be controlled with the SPECTRO-3-FIO-JR-4X color sensor.
However, it should be noted that only one LED can be in operation at a time.

The control of bicolor or tricolor LEDs is also possible, as up to 31 color values can be stored in the color sensor control electronics.



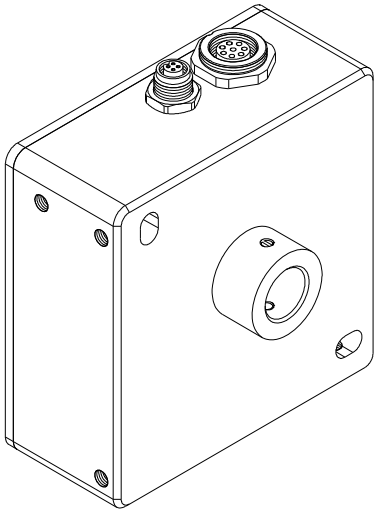

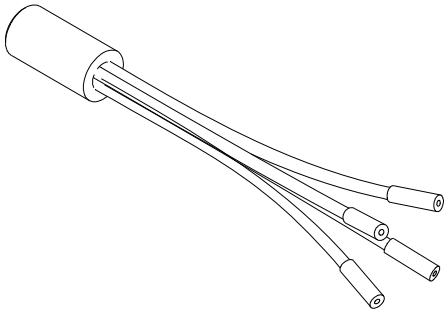

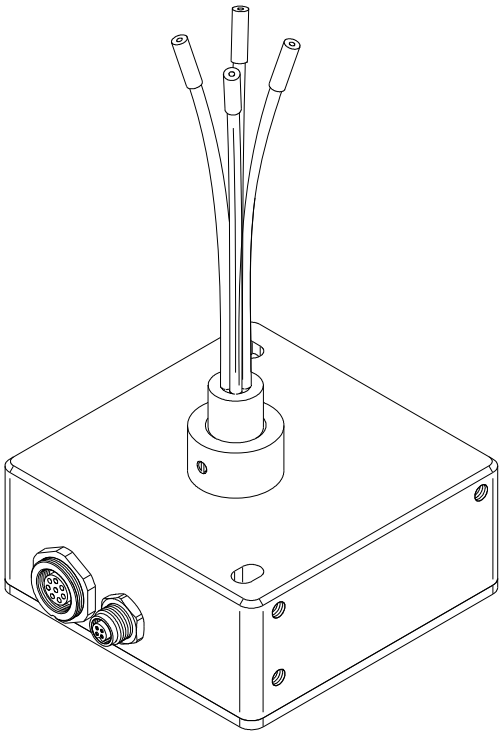

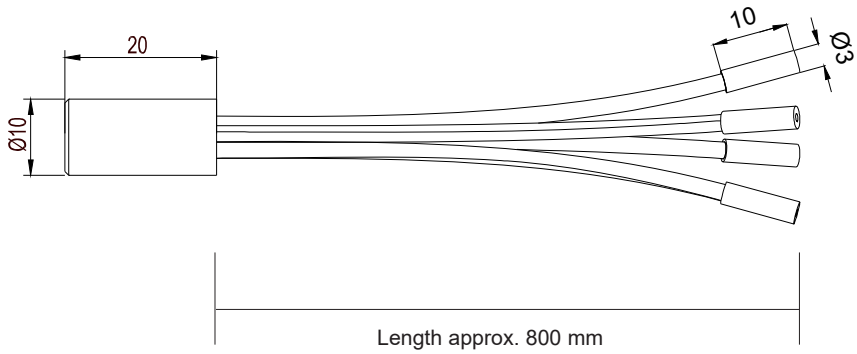


All dimensions in mm

## Connector Assignment

### Connection SPECTRO-3-FIO-JR-4X to PLC:
**8-pole fem. connector Binder Series 712**

| Pin: | Color: | Assignment: |
|---|---|---|
| 1 | white | GND (0V) |
| 2 | brown | +24VDC (±10%) |
| 3 | green | IN0 |
| 4 | yellow | OUT0 (Digital 0: typ. 0…1V, Digital 1: typ. +Ub - 10%) |
| 5 | grey | OUT1 (Digital 0: typ. 0…1V, Digital 1: typ. +Ub - 10%) |
| 6 | pink or black | OUT2 (Digital 0: typ. 0…1V, Digital 1: typ. +Ub - 10%) |
| 7 | blue | OUT3 (Digital 0: typ. 0…1V, Digital 1: typ. +Ub - 10%) |
| 8 | red | OUT4 (Digital 0: typ. 0…1V, Digital 1: typ. +Ub - 10%) |

Connecting cable:
cab-las8/SPS-(length)
cab-las8/SPS-w-(length) (angle type, 90°)
(standard length 2m)

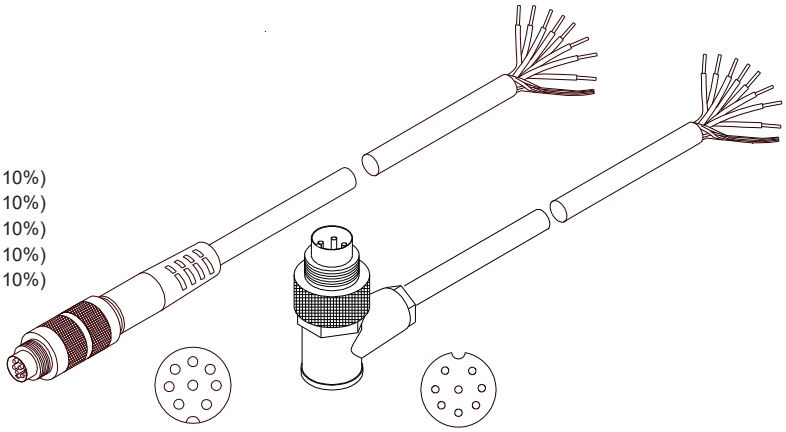

cab-las8/SPS-...
(max. length 25m, outer jacket: PUR)

cab-las8/SPS-w-...
(max. length 25m, outer jacket: PUR)

### Connection SPECTRO-3-FIO-JR-4X to PC:
**4-pole fem. connector Binder Series 707**

| Pin: | Assignment: |
|---|---|
| 1 | +24VDC (+Ub, OUT) |
| 2 | GND (0V) |
| 3 | RxD |
| 4 | TxD |

***Connection via RS232 interface at the PC:***
Connecting cable:
cab-las4/PC-(length)
cab-las4/PC-w-(length) (angle type 90°)
(standard length 2m)

***alternative:***
***Connection via USB interface at the PC:***
USB converter (incl. driver software):
cab-4/USB-(length)
cab-4/USB-w-(length) (angle type 90°)
(standard length 2m)

***alternative:***
***Connection to local network via Ethernet bus:***
Ethernet converter (incl. software „SensorFinder“):
cab-4/ETH-500
(standard length 0.5m)

Optional: External CAT5 cable, e.g.
cab-eth/M12D-RJ45-flx-(length)

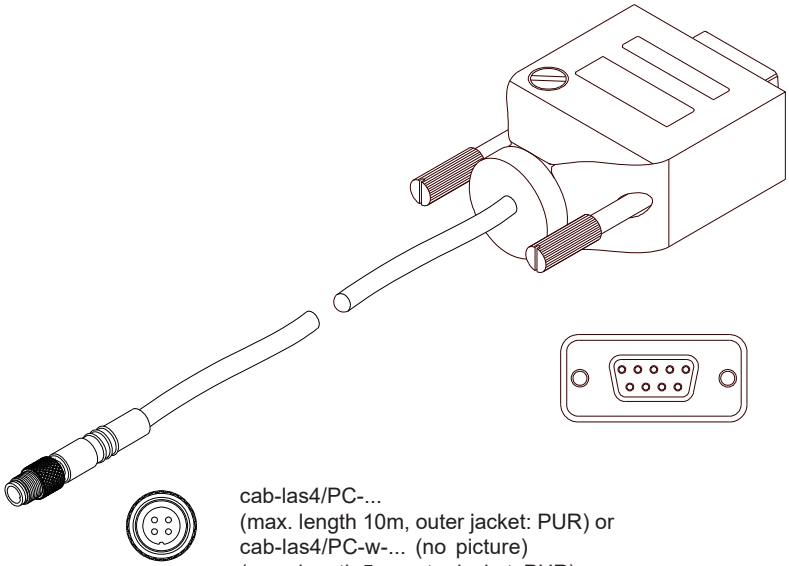

cab-las4/PC-...
(max. length 10m, outer jacket: PUR) or
cab-las4/PC-w-... (no picture)
(max. length 5m, outer jacket: PUR)

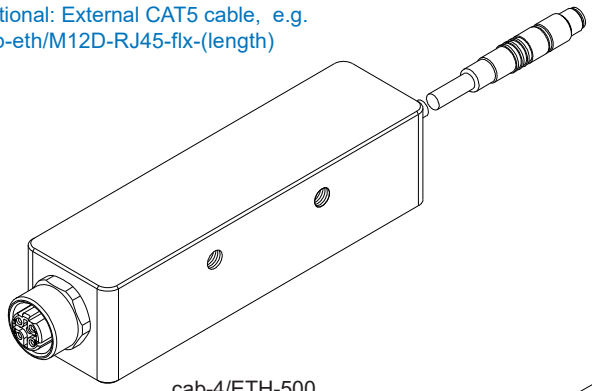

cab-4/ETH-500
(length 0.5m, outer jacket: PUR)
4-pole M12 fem. conn. (D-coded)
for connection of an external
CAT5 cable, e.g.
cab-eth/M12D-RJ45-flx-(length)

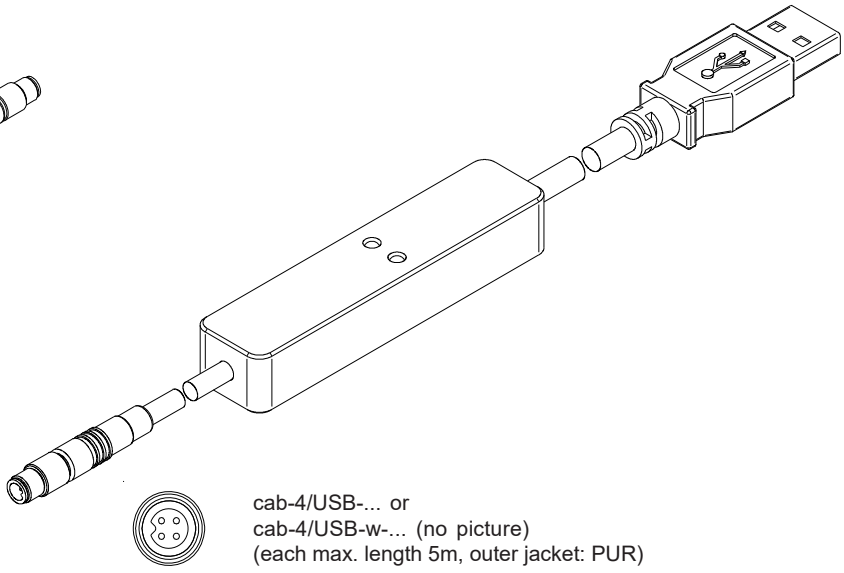

cab-4/USB-... or
cab-4/USB-w-... (no picture)
(each max. length 5m, outer jacket: PUR)

## Measuring Principle

### Special color sensor SPECTRO-3-FIO-JR-4X:

The SPECTRO-3-FIO-JR-4X color sensor is a special sensor within the SPECTRO-3-JR series. The sensor was developed to detect self-luminescent substances at four different locations - it therefore does not have its own light source. However, since the standard *SPECTRO-3-Scope* software associated with the SPECTRO-3-JR series is used for parameterization, the following also refers to an *internal light source*. As already mentioned, however, this light source is not built into this sensor. This mainly affects the POWER MODE, POWER, and LED MODE parameters. These parameters have no function in this special SPECTRO-3-FIO-JR-4X sensor.

### Measuring principle of the color sensor SPECTRO-3-FIO-JR-4X:

For the SPECTRO-4-FIO-JR-4X special sensor, only the OFF MODE is relevant. In OFF MODE, the SPECTRO-3-FIO-JR-4X color sensor can detect so-called “self-luminescent” objects. Selectable amplification of the receiver signal and an INTEGRAL function allow the sensor to be adjusted to almost any “self-luminescent” object.

An integrated 3-fold receiver (for the red, green, and blue content of the light) is used as the receiver to absorb part of the light emitted by the “self-illuminator.”

The SPECTRO-3 color sensor can be „taught“ up to 31 colors. For each of these taught colors it is possible to set tolerances.

In „X Y INT - 2D“ or „s i M - 2D“ mode these tolerances form a color cylinder in space. In „X Y INT - 3D“ or „s i M - 3D“ mode the tolerances form a color sphere in space. Color evaluation according to „s i M - 2D“ is based on the lab calculation method. All modes can be used in combination with several operating modes such as „FIRST HIT“ and „BEST HIT“. Raw data are represented with 12 bit resolution.

As a special feature the sensor can be taught two completely independent parameter sets. Input IN0 can then be used to tell the sensor which parameter set it should work with.

Color detection either operates continuously or is started through an external PLC trigger signal. The respective detected color either is provided as a binary code at the 5 digital outputs or can be sent directly to the outputs, if only up to 5 colors are to be detected.

[Please note: Visualisation by means of LEDs not available with SPECTRO-3-…-JR types.]

[Please note: TEACH button not available with SPECTRO-3-…-JR types.]

Parameters and measurement values can be exchanged between a PC and the SPECTRO-3 color sensor through the serial RS232 interface. All the parameters for color detection also can be saved to the non-volatile EEPROM of the SPECTRO-3 color sensor through this serial RS232 interface. When parameterisation is finished, the color sensor continues to operate with the current parameters in STAND-ALONE mode without a PC.



## Parameterization

**Windows® user interface:**

*(The current software version is available for download on our website.)*

The color sensor is parameterized under Windows® with the SPECTRO3-Scope software. The Windows® user interface facilitates the teach-in process at the color sensor and supports the operator in the task of adjustment and commissioning of the color sensor. Moreover, the software features a data recorder function that allows the automatic recording of recorded data and the saving of those at the hard disk of the PC.

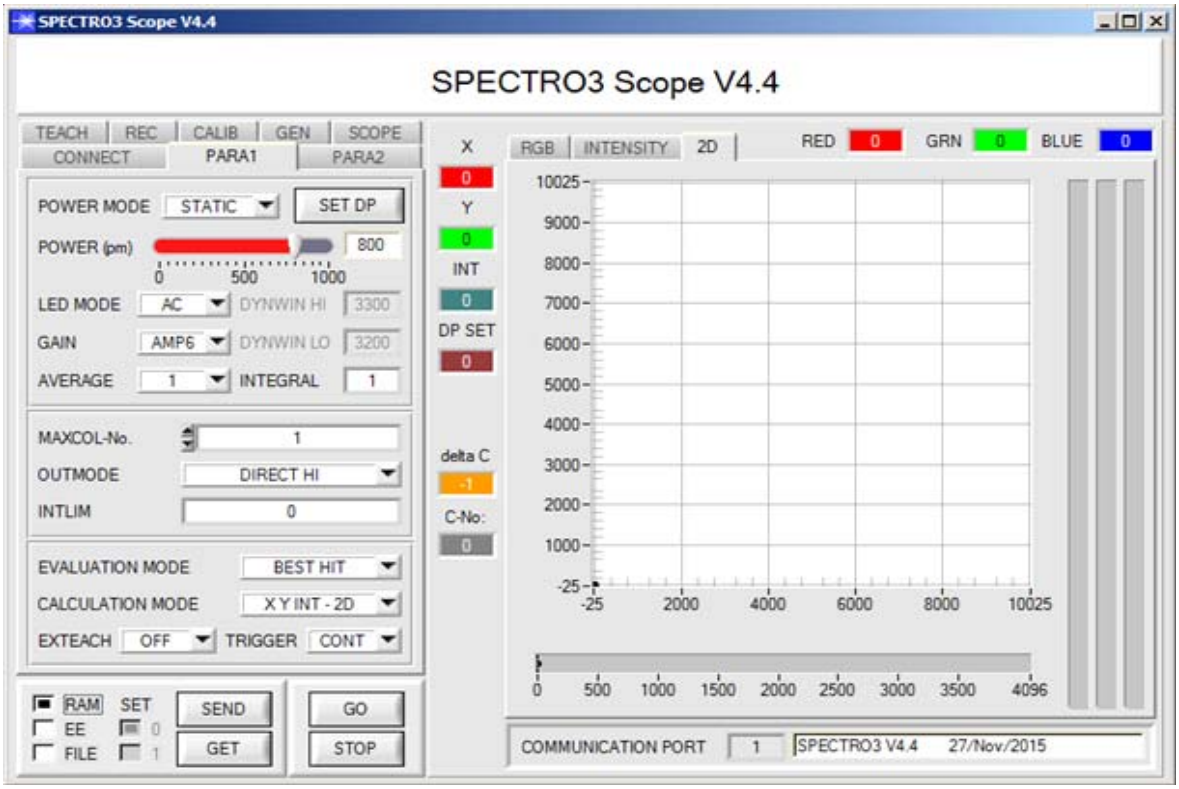


Under Windows® representation of the color value on a PC in numeric form and in a color chart, and representation of RGB values in a time chart. In addition the current RGB values are displayed as a bar chart.

Parameters and measurement values can be exchanged between PC and sensor either through RS232 or Ethernet (using an Ethernet adaptor). Through the interface all the parameters can be stored in the non-volatile EEPROM of the sensor.
Tab PARA1 and PARA2 are used for setting parameters such as:

- POWER MODE: Light power of the LED
  [Please note: POWER and POWER MODE not available with SPECTRO-4-FIO-JR-4X]
- LED MODE: Triggering of the internal light source
  [Please note: For the SPECTRO-4-FIO-JR-4X special sensor, only the OFF MODE is relevant.]
- GAIN: Used for setting the gain of the receiver
- AVERAGE: Averaging over a maximum of 32768 values
- INTEGRAL: This function field is used to set the number of scan values (measurement values) over which the raw signal measured at the receiver is summed up. This integral function allows the reliable detection even of extremely weak signals
- MAXCOL-No.: Number of colors to be checked
- OUTMODE: Triggering of the digital outputs
- INTLIM: Minimum intensity required for color evaluation
- EVALUATION MODE: Various evaluation modes to choose from (FIRST HIT, BEST HIT, MIN DIST, COL5, THD RGB)
- CALCULATION MODE: There are 2 methods of teaching a color, which are selectable via CALCULATION MODE. The CALCULATION MODE „X Y INT - 3D“ (or „s i M - 3D“) uses a color sphere in space with radius TOL. Contrary to this, the CALCULATION MODE „X Y INT - 2D“ (or „s i M - 2D“) uses a color cylinder in space with radius CTO or siTO and with height ITO or M. The teach process is the same for both methods. Color evaluation according to "s i M - 2D" uses the Lab calculation method
- EXTEACH: In all the evaluation modes teaching of a color can be performed externally through IN0 or by means of the button at the sensor housing
  [Please note: TEACH button not available with SPECTRO-3-…-JR types.]
- TRIGGER: Continuous or external or self trigger

## Firmware-Update

**Firmware-Update über die Software „ProgramLoader“ bzw. „FirmwareLoader“:**

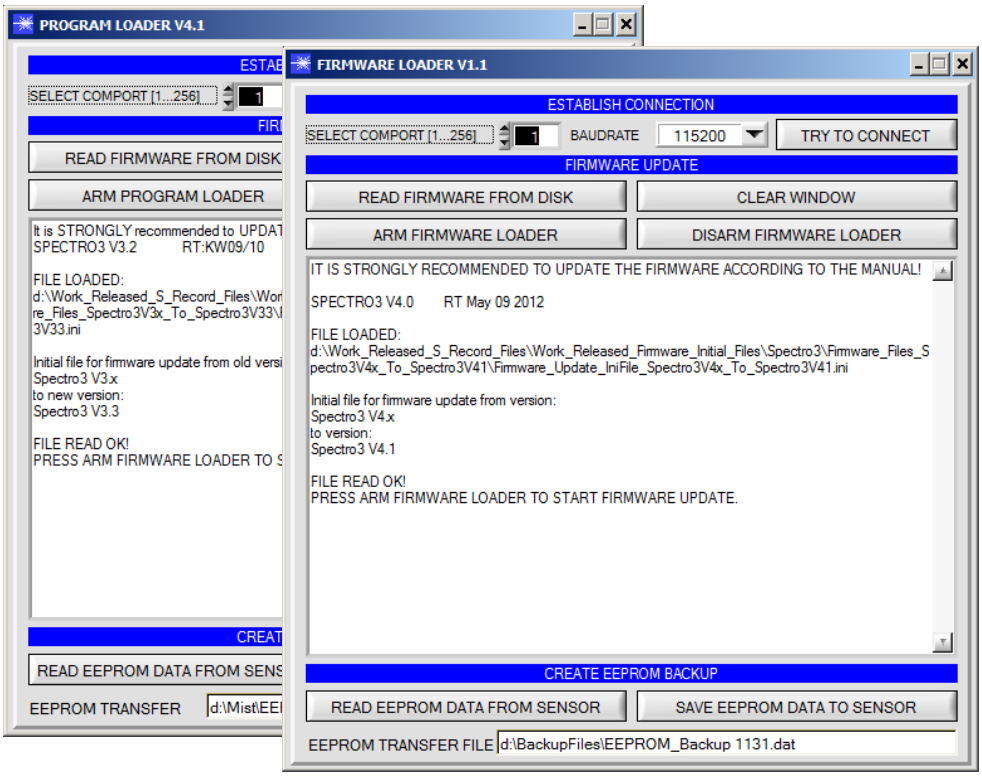


Die Software „Program Loader“ bzw. „Firmware Loader“ ermöglicht es dem Anwender, ein automatisches Firmwareupdate durchzuführen. Das Update wird dabei über die RS232 Schnittstelle durchgeführt.

Zum Firmware-Update werden ein Initialisierungsfile (xxx.ini) sowie ein Firmwarefile (xxx.elf.S) benötigt. Diese Files sind vom Lieferanten erhältlich. In manchen Fällen wird ein zusätzliches Firmwarefile für den Programmspeicher (xxx.elf.p.S) benötigt, dieses File wird dann automatisch mit den beiden anderen Dateien zur Verfügung gestellt.

## Accessories

### Mounting unit
### MOUNT-SPECTRO-3-JR/CL
(please order separately)



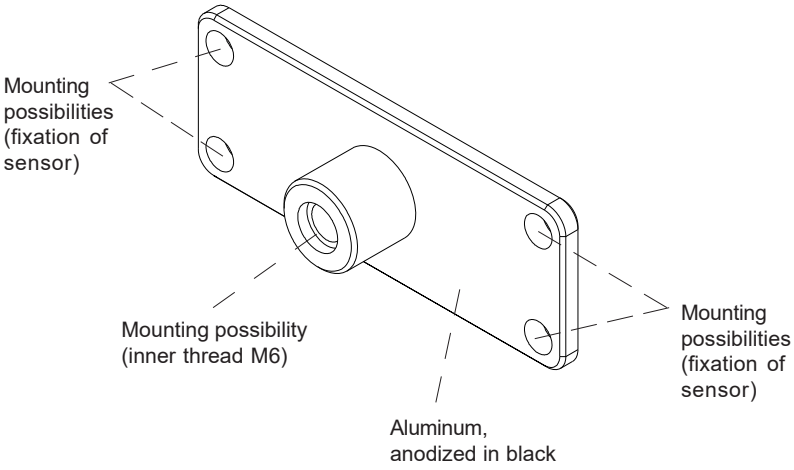


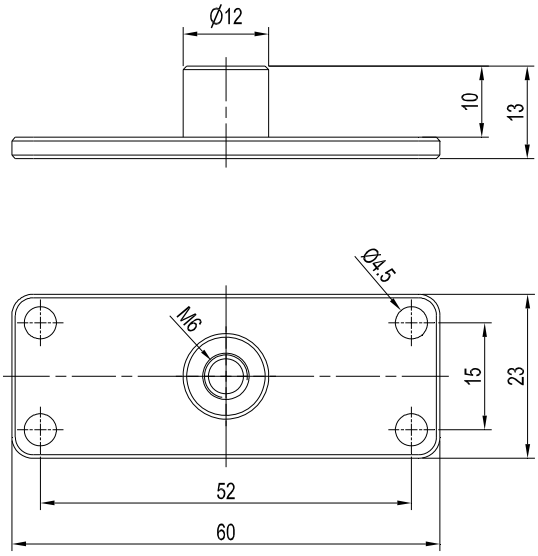


(All dimensions in mm)

**Example of use:**

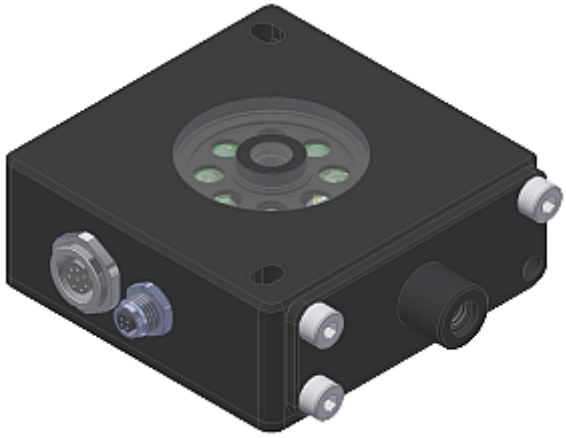

Example:
MOUNT-SPECTRO-3-JR/CL mounting unit
mounted on SPECTRO-3-50-FCL-JR color sensor