SPECTRO Series

SPECTRO-3-FIO-JR



- Big working range: typ. 1 mm ... 500 mm (depends on fiber optics and attachment optics)
- Big assortment of fiber optics (reflected or transmitted light)
- Up to 31 colors can be stored
- RS232 interface (USB or Ethernet converter is available)
- Super-bright white-light LED (AC-/DC-/PULSE-operation or OFF for luminous objects can be switched)
- Color detection, contrast detection, and gray scale detection
- Insensitive to outside light (in AC- or PULSE-operation)
- Brightness correction can be activated (STAT/DYN)
- Scan frequency max. 35 kHz (in DC- or OFF-operation)
- Switching frequency max. 40 kHz
- TEACH via PC or PLC (external input)
- Various evaluation algorithms can be activated
- "BEST HIT" mode ("human color assessment")
- Parameterizable via Windows® software, scope function
- Temperature compensated
- Averaging can be activated (from 1 up to over 32000 values)
- Color control of luminous objects (LEDs, halogen lamps, displays, ...)
- 3-color filter detector (true color detector: "human color perception")

Design

Product name:

SPECTRO-3-FIO-JR
(incl. Windows® PC software SPECTRO3-Scope and SPECTRO3-COMFORT-Scope)

Accessories: (cf. p. 11-16)

Fiber optics
Attachment optics
Fiber optics mounting

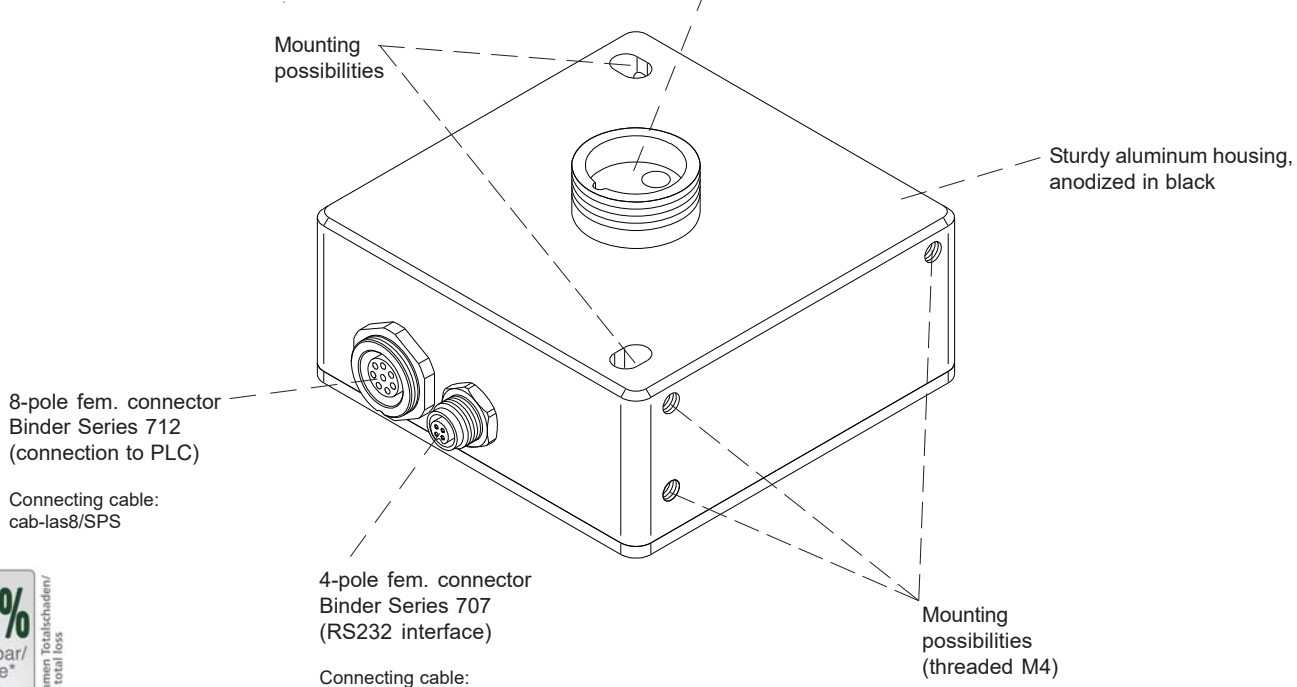

100 % reparierbar/ reparable* * ausgenommen Totalschaden/ excluding total loss

Technical Data

Model	SPECTRO-3-FIO-JR
Voltage supply	+24VDC (± 10%), reverse polarity protected, overcurrent protected
Current consumption	< 160 mA
Max. switching current	100 mA, short circuit proof
Input digital (1x)	IN0 (Pin 3), digital (0V/+24V)
Outputs digital (5x)	OUT0 ... OUT4 (Pin 4 ... 8): digital (0V/+24V), npn-/pnp-able (bright-/dark-switching, can be switched)
Interface	RS232
Pulse lengthening	0 ... 100 ms, adjustable via PC software
Averaging	max. 32768 values, adjustable via PC software
Scan frequency	LED operation, can be switched via PC software: AC operation: max. 20 kHz (depends on parameterization) DC and OFF operation: max. 35 kHz (depends on parameterization) PULSE operation: max. 5 kHz (depends on parameterization)
Switching frequency	max. 40 kHz
Transmitter (light source)	Super-bright white-light LED
Transmitter control	can be switched via PC software: AC operation (LED MODE-AC), DC operation (LED MODE-DC), OFF operation (LED MODE-OFF) or PULSE operation (LED MODE-PULSE)
Object distance (measuring range)	with reflected light fiber optics: typ. 1 mm ... 500 mm (depends on fiber optics and attachment optics) with transmitted light fiber optics: typ. 10 mm ... 500 mm (depends on fiber optics and attachment optics)
Receiver	3-color filter detector (TRUE COLOR detector, “human color perception“), color filter curves acc. to CIE 1931
Receiver gain setting	8 steps (AMP1 ... AMP8), adjustable via PC software
Ambient light	max. 5000 Lux
Size of light spot	circular: typ. Ø 0.2 mm ... Ø 20 mm or rectangular: typ. 3 mm x 0.5 mm ... 6 mm x 1 mm depends on fiber optics and attachment optics (cf. catalog FIO series)
Reproducibility	in the X, Y color range each 1 digit at 12-bit A/D conversion
Temperature drift X,Y	ΔX/ΔT; ΔY/ΔT typ. 0,2 digits/°C (< 0,01% / °C)
Color difference	ΔE >= 0,5
Color space	X Y INT siM (Lab)
Color memory capacity	non-volatile EEPROM with parameter sets for max. 31 colors
Housing dimensions	LxWxH approx. 65 mm x 65 mm x 36 mm (incl. fiber optics adapter M18x1, without flange connectors)
Housing material	aluminum, anodized in black
Enclosure rating	IP64
Connecting cables	to PLC: cab-las8/SPS or cab-las8/SPS-w to PC/RS232 interface: cab-las4/PC or cab-las4/PC-w to PC/USB interface: cab-4/USB or cab-4/USB-w to PC/Ethernet interface: cab-4/ETH
Type of connector	connection to PLC: 8-pole fem. connector (Binder 712), connection to PC: 4-pole fem. connector (Binder 707)
Operating temp. range	-20°C ... +55°C
Storage temperature range	-20°C ... +85°C
EMC test acc. to	DIN EN 60947-5-2 CE

Dimensions

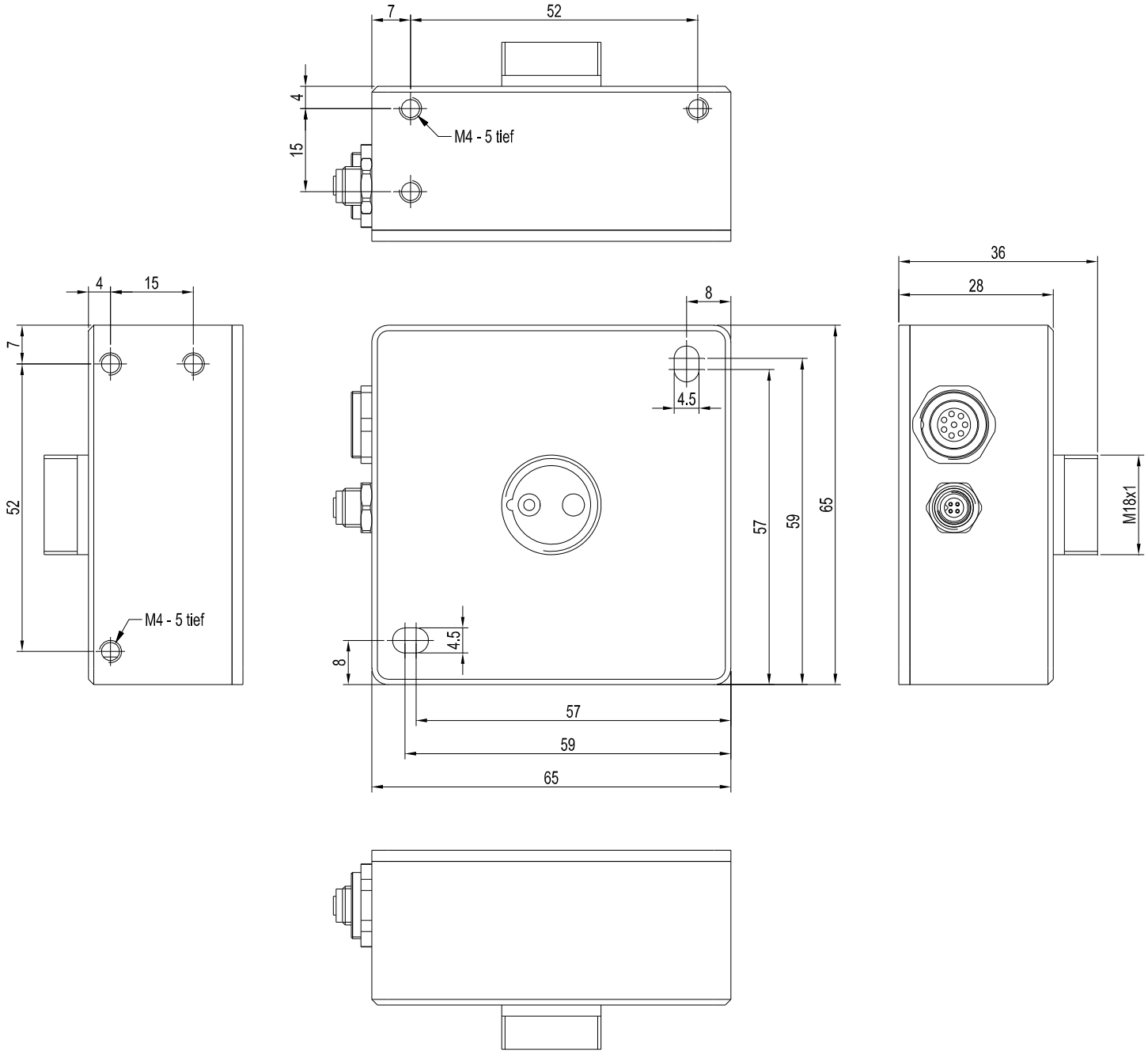

All dimensions in mm

Connector Assignment

Connection to PLC:
8-pole fem. connector Binder Series 712

Pin:	Color:	Assignment:
1	white	GND (0V)
2	brown	+24VDC (±10%)
3	green	IN0
4	yellow	OUT0 (Digital 0: typ. 0…1V, Digital 1: typ. +Ub - 10%)
5	grey	OUT1 (Digital 0: typ. 0…1V, Digital 1: typ. +Ub - 10%)
6	pink or black	OUT2 (Digital 0: typ. 0…1V, Digital 1: typ. +Ub - 10%)
7	blue	OUT3 (Digital 0: typ. 0…1V, Digital 1: typ. +Ub - 10%)
8	red	OUT4 (Digital 0: typ. 0…1V, Digital 1: typ. +Ub - 10%)

Connecting cable:
cab-las8/SPS-(length)
cab-las8/SPS-w-(length) (angle type, 90°)
(standard length 2m)

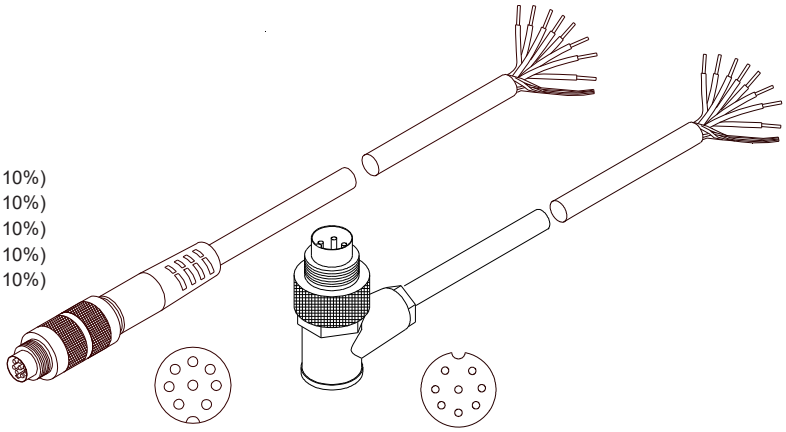

cab-las8/SPS-...
(max. length 25m, outer jacket: PUR)

cab-las8/SPS-w-...
(max. length 25m, outer jacket: PUR)

Connection to PC:
4-pole fem. connector Binder Series 707

Pin:	Assignment:
1	+24VDC (+Ub, OUT)
2	GND (0V)
3	RxD
4	TxD

Connection via RS232 interface at the PC:
Connecting cable:
cab-las4/PC-(length)
cab-las4/PC-w-(length) (angle type 90°)
(standard length 2m)

alternative:
Connection via USB interface at the PC:
USB converter (incl. driver software):
cab-4/USB-(length)
cab-4/USB-w-(length) (angle type 90°)
(standard length 2m)

alternative:
Connection to local network via Ethernet bus:
Ethernet converter (incl. software „SensorFinder“):
cab-4/ETH-500
(standard length 0.5m)

Optional: External CAT5 cable, e.g.
cab-eth/M12D-RJ45-flx-(length)

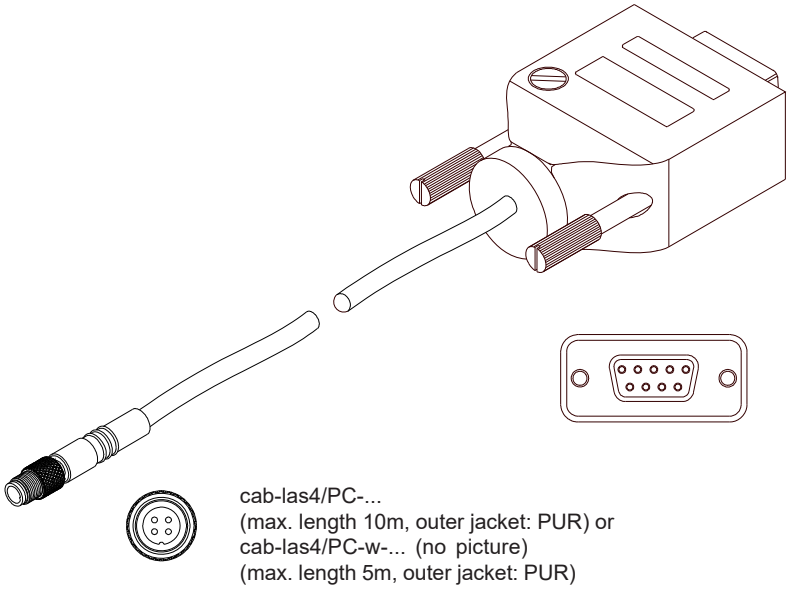

cab-las4/PC-...
(max. length 10m, outer jacket: PUR) or
cab-las4/PC-w-... (no picture)
(max. length 5m, outer jacket: PUR)

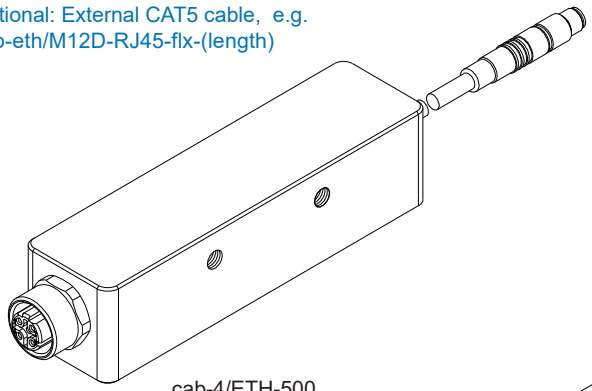

cab-4/ETH-500
(length 0.5m, outer jacket: PUR)
4-pole M12 fem. conn. (D-coded)
for connection of an external
CAT5 cable, e.g.
cab-eth/M12D-RJ45-flx-(length)

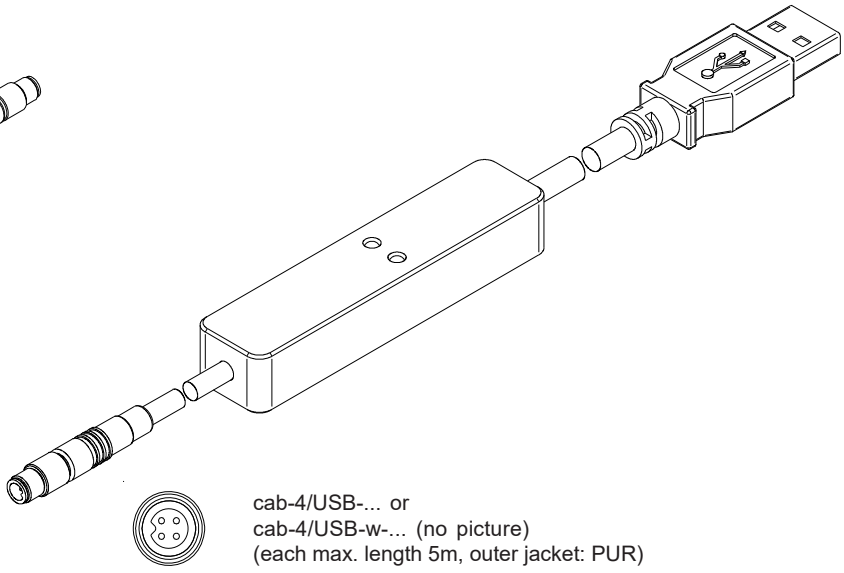

cab-4/USB-... or
cab-4/USB-w-... (no picture)
(each max. length 5m, outer jacket: PUR)

Measuring Principle

Measuring principle of the color sensors of SPECTRO-3 series:

The SPECTRO-3 provides highly flexible signal acquisition. For example, the sensor can be operated in alternating-light mode (AC mode), which makes the sensor insensitive to extraneous light. It also can be set to constant-light mode (DC mode), which makes the sensor extremely fast and allows a scan-frequency of up to 35 kHz. An OFF function turns off the integrated light source at the sensor and changes to DC operation. The sensor then can detect so-called „self-luminous objects“.
In PULSE operation extremely dark surfaces can be reliably detected. With the stepless adjustment of the integrated light source as well as the selectable gain of the receiver signal and an INTEGRAL function the sensor can be set to almost any surface or any “self-luminous object“.

When the integrated light source of the SPECTRO-3 color sensor is activated, the sensor detects the radiation that is diffusely reflected from the object. As a light source the SPECTRO-3 color sensor uses a white-light LED with adjustable transmitter power. An integrated 3-fold receiver for the red, green, and blue content of the light that is reflected from the object, or the light that is emitted by a „self-luminous object“, is used as a receiver.

The SPECTRO-3 color sensor can be „taught“ up to 31 colors. For each of these taught colors it is possible to set tolerances. In „X Y INT - 2D“ or „s i M - 2D“ mode these tolerances form a color cylinder in space. In „X Y INT - 3D“ or „s i M - 3D“ mode the tolerances form a color sphere in space. Color evaluation according to „s i M - 2D“ is based on the lab calculation method. All modes can be used in combination with several operating modes such as „FIRST HIT“ and „BEST HIT“. Raw data are represented with 12 bit resolution.

As a special feature the sensor can be taught two completely independent parameter sets. Input IN0 can then be used to tell the sensor which parameter set it should work with.

Color detection either operates continuously or is started through an external PLC trigger signal. The respective detected color either is provided as a binary code at the 5 digital outputs or can be sent directly to the outputs, if only up to 5 colors are to be detected. At the same time the detected color code is visualised by means of 5 LEDs at the housing of the SPECTRO-3.
[Please note: Visualisation by means of LEDs not available with SPECTRO-3-…-JR types.]

With a TEACH button at the sensor housing the color sensor can be taught up to 31 colors. For this purpose the corresponding evaluation mode must be set with the software. The TEACH button is connected in parallel to the input IN0 (green wire at cable cab-las8/SPS). [Please note: TEACH button not available with SPECTRO-3-…-JR types.]

Parameters and measurement values can be exchanged between a PC and the SPECTRO-3 color sensor through the serial RS232 interface. All the parameters for color detection also can be saved to the non-volatile EEPROM of the SPECTRO-3 color sensor through this serial RS232 interface. When parameterisation is finished, the color sensor continues to operate with the current parameters in STAND-ALONE mode without a PC.

The sensors of the SPECTRO-3 series can be calibrated (white-light balancing). Balancing can be performed to any white surface. A ColorChecker™ table with 24 color fields is available as an alternative. White-light balancing or calibration can be performed to one of the white fields.

Parameterization

Windows® user interface:

(The current software version is available for download on our website.)

The color sensor is parameterized under Windows® with the SPECTRO3-Scope software. The Windows® user interface facilitates the teach-in process at the color sensor and supports the operator in the task of adjustment and commissioning of the color sensor. Moreover, the software features a data recorder function that allows the automatic recording of recorded data and the saving of those at the hard disk of the PC.

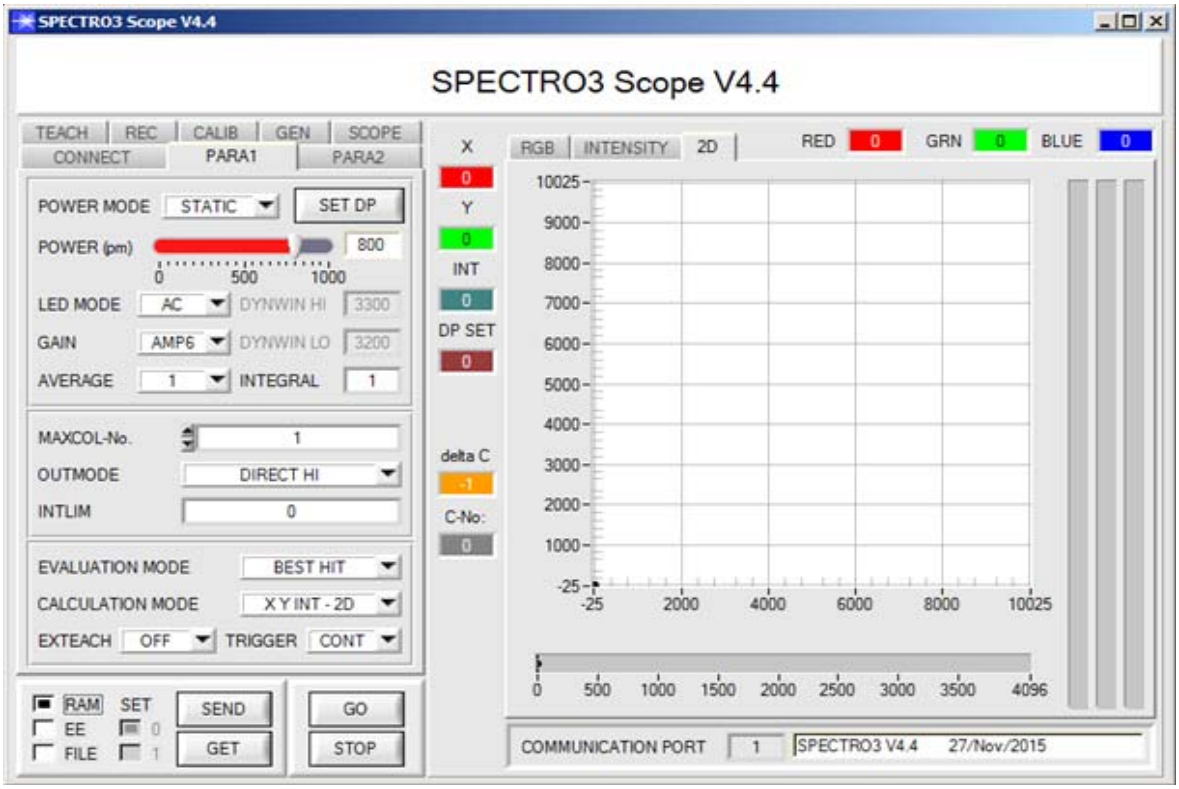

Under Windows® representation of the color value on a PC in numeric form and in a color chart, and representation of RGB values in a time chart. In addition the current RGB values are displayed as a bar chart.

Parameters and measurement values can be exchanged between PC and sensor either through RS232 or Ethernet (using an Ethernet adaptor). Through the interface all the parameters can be stored in the non-volatile EEPROM of the sensor.
Tab PARA1 and PARA2 are used for setting parameters such as:

- POWER MODE: Light power of the LED
- LED MODE: Triggering of the internal light source
- GAIN: Used for setting the gain of the receiver
- AVERAGE: Averaging over a maximum of 32768 values
- INTEGRAL: This function field is used to set the number of scan values (measurement values) over which the raw signal measured at the receiver is summed up. This integral function allows the reliable detection even of extremely weak signals
- MAXCOL-No.: Number of colors to be checked
- OUTMODE: Triggering of the digital outputs
- INTLIM: Minimum intensity required for color evaluation
- EVALUATION MODE: Various evaluation modes to choose from (FIRST HIT, BEST HIT, MIN DIST, COL5, THD RGB)
- CALCULATION MODE: There are 2 methods of teaching a color, which are selectable via CALCULATION MODE. The CALCULATION MODE „X Y INT - 3D“ (or „s i M - 3D“) uses a color sphere in space with radius TOL. Contrary to this, the CALCULATION MODE „X Y INT - 2D“ (or „s i M - 2D“) uses a color cylinder in space with radius CTO or siTO and with height ITO or M. The teach process is the same for both methods. Color evaluation according to "s i M - 2D" uses the Lab calculation method
- EXTEACH: In all the evaluation modes teaching of a color can be performed externally through IN0 or by means of the button at the sensor housing [Please note: TEACH button not available with SPECTRO-3-…-JR types.]
- TRIGGER: Continuous or external or self trigger

Parametrization

Windows® user interface SPECTRO3-COMFORT-Scope as an alternative to SPECTRO3-Scope:

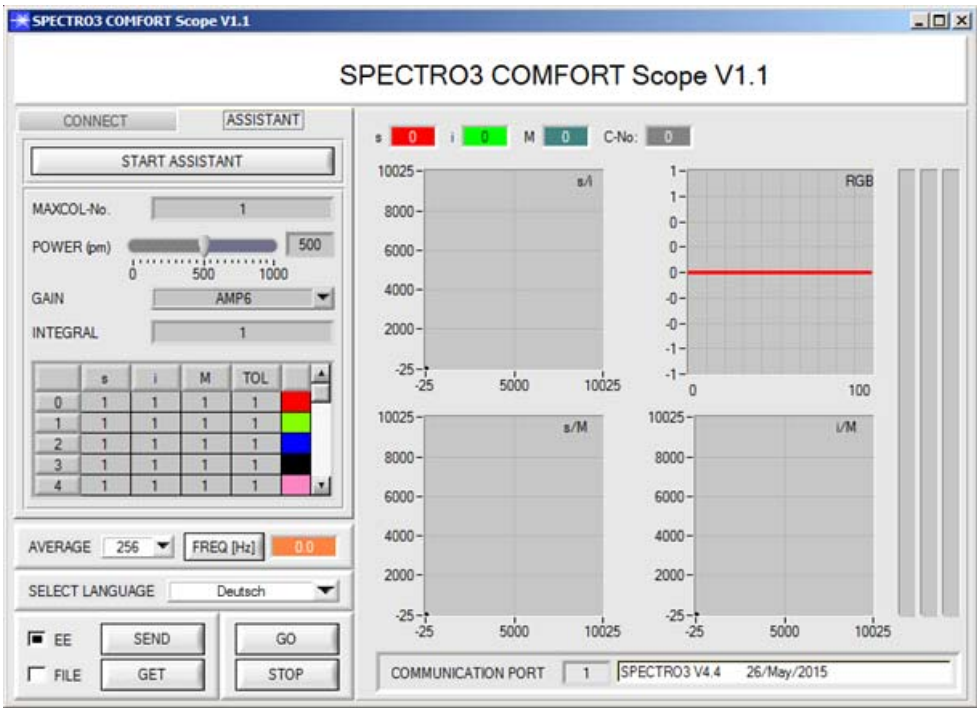

Color sensors of the following types can be quickly parameterised with the SPECTRO3-COMFORT-SCOPE software:

SPECTRO-3 (im M34 housing)
SPECTRO-3-CL
SPECTRO-3-JR
SPECTRO-3-SL
SPECTRO-3-SLE

The software features menu guidance that prompts the user to enter all the relevant parameters.

Firmware Update

Firmware update by means of software „ProgramLoader“ or „FirmwareLoader“:

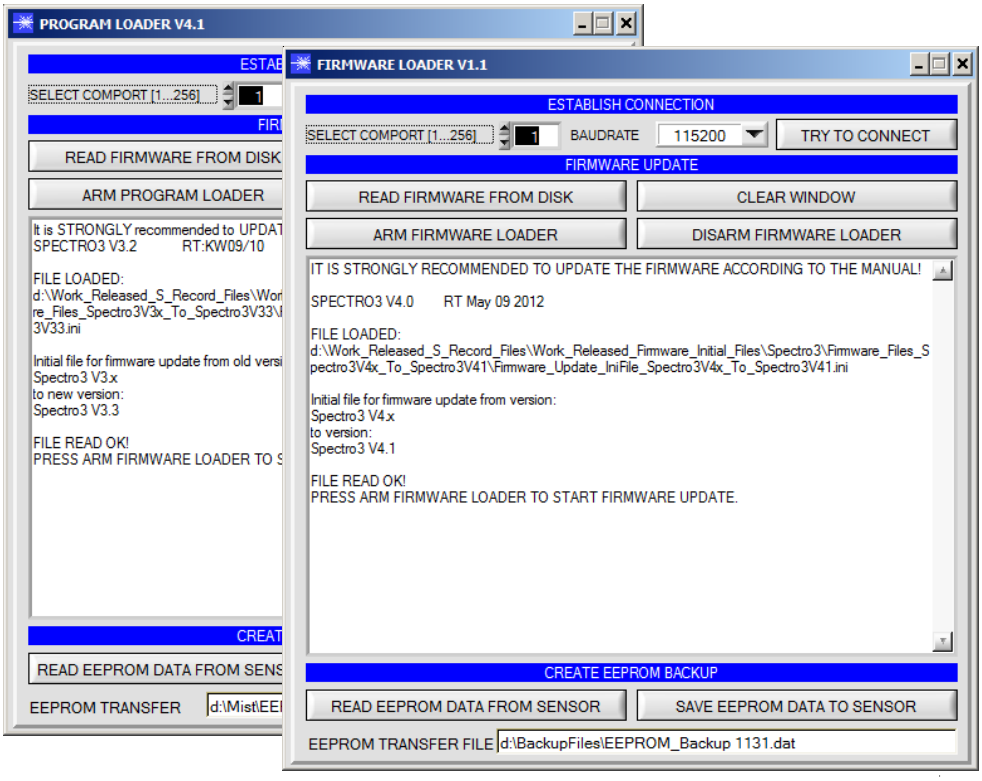

The software „ProgramLoader“ or „FirmwareLoader“ allows the user to perform an automatic firmware update. The update will be carried out through the RS232 interface.

An initialisation file (xxx.ini) and a firmware file (xxx.elf.S) are required for performing a firmware update. These files can be obtained from your supplier. In some cases an additional firmware file for the program memory (xxx.elf.p.S) is also needed, and this file will be automatically provided together with the other two files.

Diagrams

Diagrams: **SPOT DIAMETER depending on object distance**

SPOT DIAMETER [distance], typ.

SPECTRO-3-FIO-JR
with fiber optics R-S-A1.1-(0.6)-1200-67°
and attachment optics KL-4
(fiber optics fixed at limit stop into attachment optics)

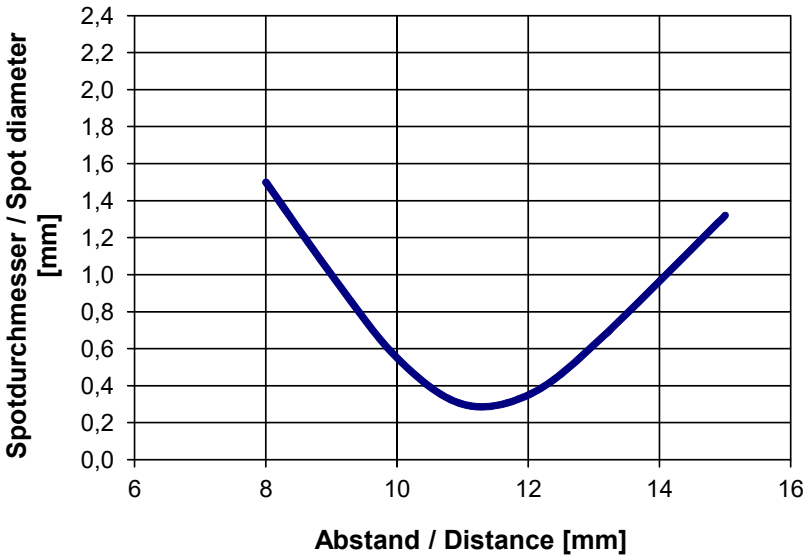

SPOT DIAMETER [distance], typ.

SPECTRO-3-FIO-JR
with fiber optics R-S-A1.1-(1.1)-1200-67°
and attachment optics KL-4
(fiber optics fixed at limit stop into attachment optics)

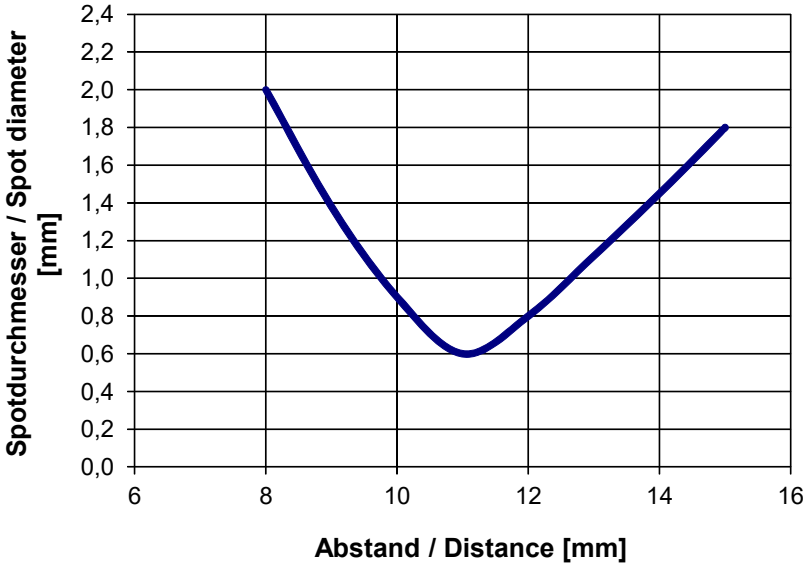

SPOT DIAMETER [distance], typ.

SPECTRO-3-FIO-JR
with fiber optics R-S-A1.1-(1.5)-1200-67°
and attachment optics KL-4
(fiber optics fixed at limit stop into attachment optics)

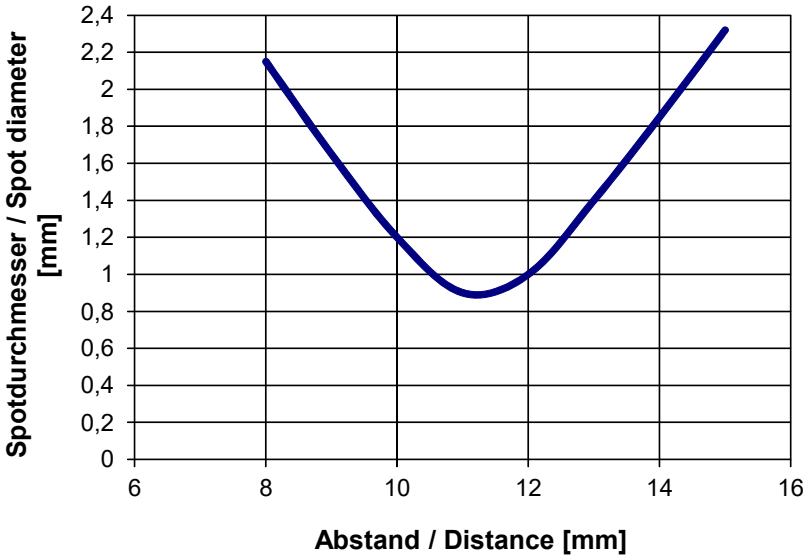

Diagrams

Diagrams: **SPOT DIAMETER**
depending on object distance

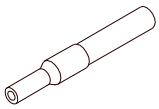

Fiber bundle Ø 2.5 mm

SPOT DIAMETER [distance], typ.

SPECTRO-3-FIO-JR
with fiber optics R-P-A2.0-(2.5)-600-67°



SPOT DIAMETER [distance], typ.

SPECTRO-3-FIO-JR
with fiber optics R-S-A2.0-(2.5)-1200-67°
and attachment optics KL-3
(fiber optics is inner stop fixed to attachment optics)

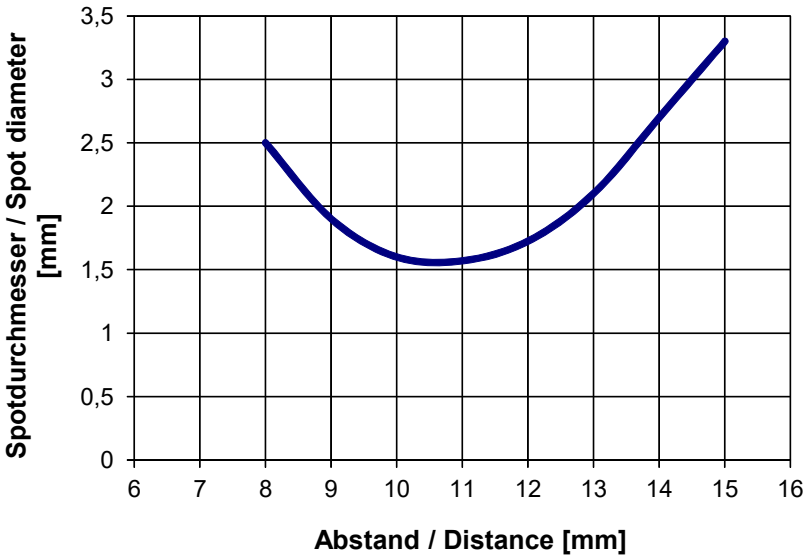

SPOT DIAMETER [distance], typ.

SPECTRO-3-FIO-JR
with fiber optics R-S-A2.0-(2.5)-1200-67°
and attachment optics KL-M18-A2.0
(fiber optics is inner stop fixed to attachment optics)

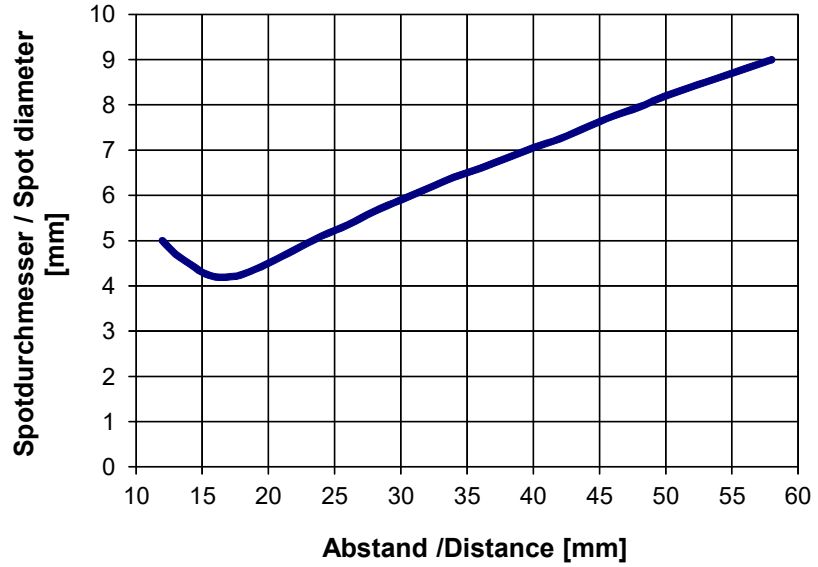

Diagrams

Diagrams: **SPOT DIAMETER depending on object distance**

SPOT DIAMETER [distance], typ.

SPECTRO-3-FIO-JR
with fiber optics R-S-A2.0-(2.5)-1200-67°
and attachment optics KL-M34-A2.0
(fiber optics is inner stop fixed to attachment optics)

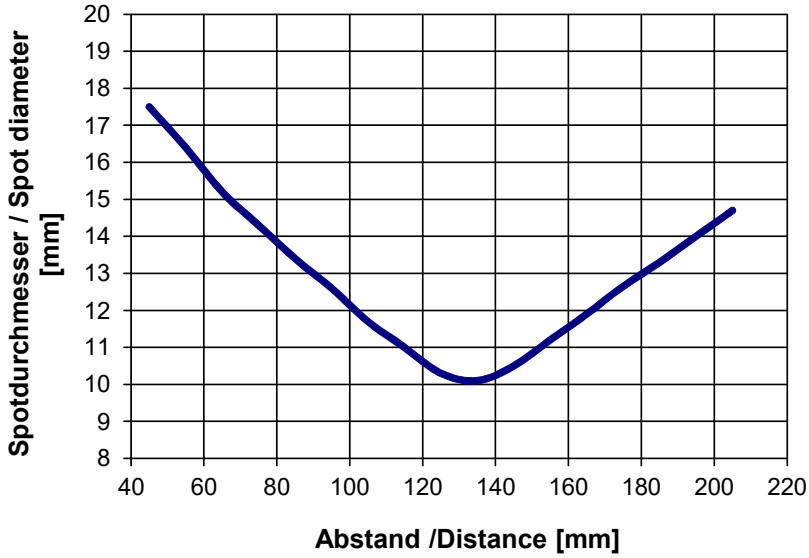

SPOT DIAMETER [distance], typ.

SPECTRO-3-FIO-JR
with fiber optics R-S-A3.0-(3.0)-1200-67°

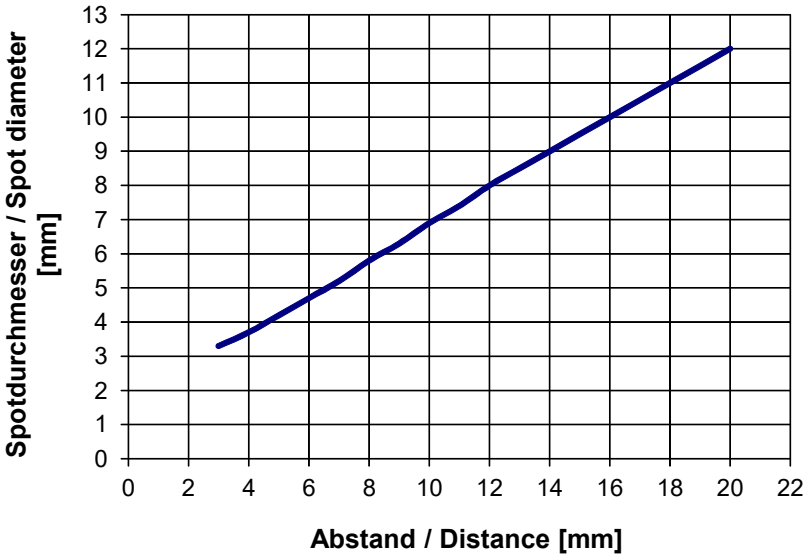

◆ short semiaxis
● long semiaxis

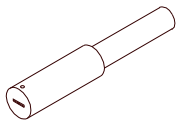

Fiber gap 6 mm x 1 mm

SPOT DIAMETER [distance], typ.

SPECTRO-3-FIO-JR
with fiber optics R-S-R2.1-(6x1)-1200-67°

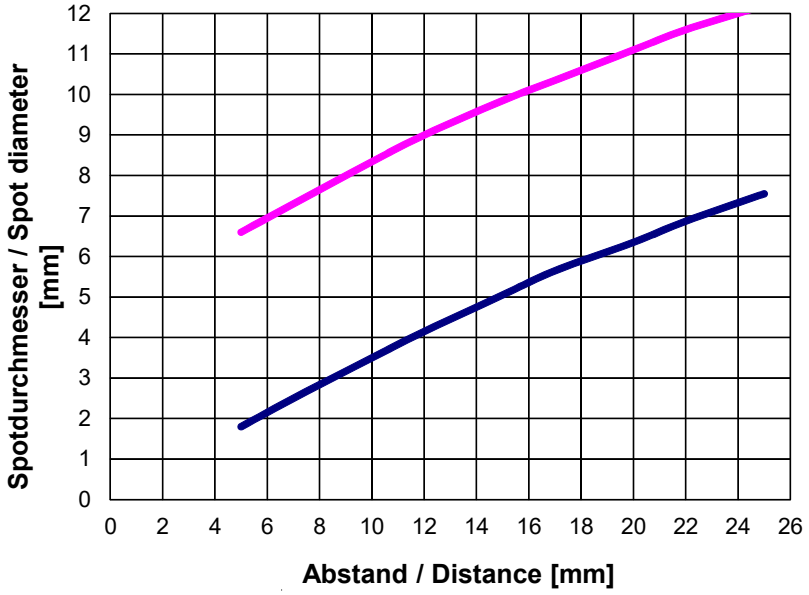

Fiber Optics

Field of use:

Optical fibers offer solutions for difficult tasks in optoelectronis. They can be used universally and allow flexible applications.



Advantages:

- Highest quality
- Selection from different fiber types
- Thermal stability
- Great variety of available standard sensor heads
- Special designs
- Various attachment optics available

Characteristics:

Light-conducting glass fibers are optical components that allow the transmission of light through any curved path based on the principle of total reflection.

The individual fiber is composed of high-break core glass and low-break cladding glass. The light beams entering the core glass within the critical angle are guided through the fiber by way of reflection at the core/cladding contact surfaces (step index fiber).

The highly flexible optical fibers are made of bundled individual glass fibers. The ends are each glued into a sensor head and a connector. The faces are optically polished. For protection against mechanical, chemical, or thermal destruction the optical fibers are provided with a corresponding protective sheath.

Order Code:

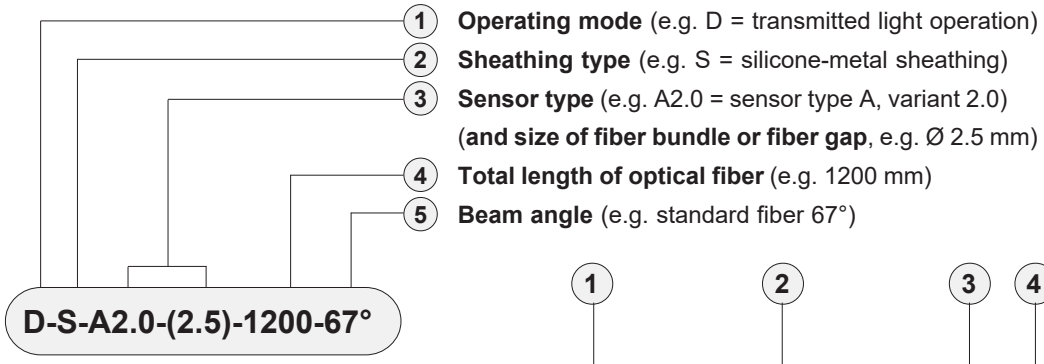

Order code for optical fiber

1 **Operating mode** (e.g. D = transmitted light operation)
2 **Sheathing type** (e.g. S = silicone-metal sheathing)
3 **Sensor type** (e.g. A2.0 = sensor type A, variant 2.0)
(**and size of fiber bundle or fiber gap**, e.g. Ø 2.5 mm)
4 **Total length of optical fiber** (e.g. 1200 mm)
5 **Beam angle** (e.g. standard fiber 67°)

(For detailed description of the various types of fiber optics, please cf. catalog „FIO Series“)

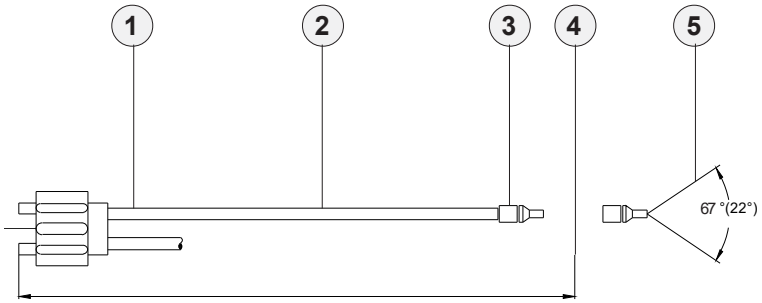

Dimensions of adapter	cf. catalog FIO Series
Attachment optics (e.g. focus lens, reflex optics, prismn optics)	cf. catalog FIO Series
Fiber optics for reflex light operation	cf. catalog FIO Series
Fiber optics for transmitted light operation	cf. catalog FIO Series
Mounting hints	cf. catalog FIO Series

Optical Frontends

Overview: Optical frontends for fiber optics


KL-1-A2.0


KL-2-A2.0


KL-3-A2.0
KL-4-A1.1
KL-5-R1.1
KL-8-R2.1
KL-9-A3.0


KL-3/90°-A2.0
KL-8/90°-A2.0


KL-M12/90°-XL-A2.0


KL-90-A2.0


KL-52-XL-A3.0


KL-M8-A1.1


KL-M12-A1.1
KL-M12-A2.0
KL-M12-A3.0
KL-M12-R1.1


KL-M12-XL-A1.1
KL-M12-XL-A2.0
KL-M12-XL-R1.1


KL-M18-A1.1
KL-M18-A2.0
KL-M18-A3.0
KL-M18-M5.0
KL-M18-M6.0
KL-M18-M8.0
KL-M18-R1.1
KL-M18-R2.1


KL-M18-XL-A1.1
KL-M18-XL-A2.0
KL-M18-XL-A3.0
KL-M18-XL-M5.0
KL-M18-XL-M6.0
KL-M18-XL-M8.0
KL-M18-XL-R1.1
KL-M18-XL-R2.1


KL-M34-A1.1
KL-M34-A2.0
KL-M34-A3.0
KL-M34-M5.0
KL-M34-M6.0
KL-M34-M8.0
KL-M34-R1.1
KL-M34-R2.1


KL-M34-XL-A1.1
KL-M34-XL-A2.0
KL-M34-XL-A3.0
KL-M34-XL-M5.0
KL-M34-XL-M6.0
KL-M34-XL-M8.0
KL-M34-XL-R1.1
KL-M34-XL-R2.1


KL-M34/62-A1.1
KL-M34/62-A2.0
KL-M34/62-A3.0
KL-M34/62-R1.1
KL-M34/62-R2.1


KL-D-0°/2.5°-300-A2.0


KL-D-0°/40°-9-A2.0
KL-D-0°/42°-9-A2.0


KL-D-0°/45°-30-A2.0
KL-D-0°/45°-30-A3.0


KL-D-5°-85-POL-A2.0
KL-D-5°-85-POL-A3.0


KL-D-6°-200-A2.0


KL-D-10°-45-POL°-A3.0


KL-D-14°-84-A2.0


KL-D-17°-49-A2.0


KL-D-20°-31-A2.0


KL-D-20°-20-POL-A3.0


KL-D-28°-26-A2.0


KL-D-40°-13-A2.0

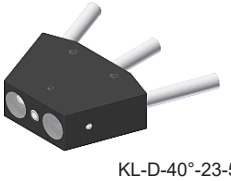
KL-D-40°-23-5/DIF-A2.0
KL-D-40°-23-5/DIF-A3.0


KL-D-45°-14-A2.0


KL-D-M12-0°/30°-9-A2.0
KL-D-M12-0°/30°-9-A3.0


KL-D-M12-XL-0°/30°-30-A2.0


KL-M34/90°-XL


KL-M18-XL-0°/(17°-60°)-30-M5.0

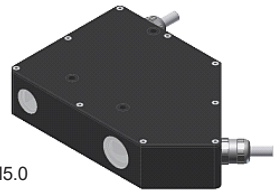
KL-D-0°/45°-85-1200-A3.0

Optical Frontends

Optical frontends for reflected light or transmitted light fiber optics:

Part number:	Suitable for fiber optics type: (R, T = reflected light, D= transmitted light)	Characteristics:
KL-1-A2.0 (2 pcs. necessary)	D-S-A2.0-(2.5)-...-67° or 22°	Transmitter/receiver distance typ. 50 mm ... 200 mm
KL-2-A2.0	R-S-A2.0-(2.5)-...-67° or 22°	Transmitter/receiver distance max. 300 mm, beam divergency ± 7,5°
KL-2-A2.0 (2 pcs. necessary)	D-S-A2.0-(2.5)-...-67° or 22°	Transmitter/receiver distance max. 300 mm, beam divergency ± 7,5°
KL-3-A2.0	R-S-A2.0-(2.5)-...-67° or 22°	Working distance typ. 10 mm ... 20 mm
KL-D-3/30-R/D-A2.0	R/D-S-A2.0-(2.5)-1200-67° *Special version**	Working distance typ. 30 mm
KL-4-A1.1	R-S-A1.1-(0.6)-...-67° or 22°	Working distance typ. 10 mm ... 15 mm
KL-4-A1.1	R-S-A1.1-(1.1)-...-67° or 22°	Working distance typ. 10 mm ... 15 mm
KL-4-A1.1	R-S-A1.1-(1.5)-...-67° or 22°	Working distance typ. 10 mm ... 15 mm
KL-5-R1.1	R-S-R1.1-(3x0.5)-...-67° or 22°	Working distance typ. 8 mm ... 20 mm
KL-8-R2.1	R-S-R2.1-(6x1)-...-67° or 22°	Working distance typ. 8 mm ... 25 mm
KL-8-N-R2.1	R-S-R2.1-(6x1)-...-67° or 22°	Working distance typ. 8 mm ... 25 mm *with guide slot (adjustment aid)*
KL-9-A3.0	R-S-A3.0-(3.0)-...-67° or 22°	Working distance typ. 8 mm ... 25 mm
KL-90-A2.0 (2 pcs. necessary)	D-S-A2.0-(2.5)-...-67° or 22°	Working distance typ. 20 mm ... 100 mm - *prismatic optics*
KL-52-XL-A3.0	R-S-A3.0-(3.0)-...-67°	Optics diameter 52 mm
KL-M8-A1.1	R-S-A1.1-(1.5)-...-67°	Working distance typ. 8 mm ... 20 mm
KL-M12-A1.1	R-S-A1.1-(1.5)-...-67°	Working distance typ. 8 mm ... 40 mm
KL-M12-A2.0	R-S-A2.0-(2.5)-...-67°	Working distance typ. 8 mm ... 40 mm
KL-M12-A3.0	R-S-A3.0-(3.0)-...-67°	Working distance typ. 8 mm ... 40 mm
KL-M12-R1.1	R-S-R1.1-(3x0.5)-...-67°	Working distance typ. 8 mm ... 40 mm
KL-M12-XL-A1.1	R-S-A1.1-(1.5)-...-67°	Working distance typ. 10 mm ... 100 mm
KL-M12-XL-A2.0	R-S-A2.0-(2.5)-...-67°	Working distance typ. 10 mm ... 100 mm
KL-M12/90°-XL-A2.0	R-S-A2.0-(2.5)-...-67°	Working distance typ. 10 mm ... 100 mm
KL-M12-XL-R1.1	R-S-R1.1-(3x0.5)-...-67°	Working distance typ. 10 mm ... 100 mm
KL-M18-A1.1	R-S-A1.1-(1.5)-...-67°	Working distance typ. 20 mm ... 60 mm
KL-M18-A2.0	R-S-A2.0-(2.5)-...-67°	Working distance typ. 20 mm ... 60 mm
KL-M18-A3.0	R-S-A3.0-(3.0)-...-67°	Working distance typ. 20 mm ... 60 mm
KL-M18-M5.0	T-S-M5.0-(5.0)-...-67° *Special version**	Working distance typ. 20 mm ... 60 mm
KL-M18-M6.0	T-S-M6.0-(6.0)-...-67° *Special version**	Working distance typ. 20 mm ... 60 mm
KL-M18-M8.0	T-S-M8.0-(8.0)-...-67° *Special version**	Working distance typ. 20 mm ... 60 mm
KL-M18-R1.1	R-S-R1.1-(3x0.5)-...-67°	Working distance typ. 20 mm ... 60 mm
KL-M18-R2.1	R-S-R2.1-(6x1)-...-67°	Working distance typ. 20 mm ... 60 mm
KL-M18-XL-A1.1	R-S-A1.1-(1.5)-...-67°	Working distance typ. 10 mm ... 200 mm
KL-M18-XL-A2.0	R-S-A2.0-(2.5)-...-67°	Working distance typ. 10 mm ... 200 mm
KL-M18-XL-A3.0	R-S-A3.0-(3.0)-...-67°	Working distance typ. 10 mm ... 200 mm
KL-M18-XL-M5.0	T-S-M5.0-(5.0)-...-67° *Special version**	Working distance typ. 10 mm ... 200 mm
KL-M18-XL-M6.0	T-S-M6.0-(6.0)-...-67° *Special version**	Working distance typ. 10 mm ... 200 mm
KL-M18-XL-M8.0	T-S-M8.0-(8.0)-...-67° *Special version**	Working distance typ. 10 mm ... 200 mm
KL-M18-XL-R1.1	R-S-R1.1-(3x0.5)-...-67°	Working distance typ. 10 mm ... 200 mm
KL-M18-XL-R2.1	R-S-R2.1-(6x1)-...-67°	Working distance typ. 10 mm ... 200 mm
KL-M18-XL--0°/(17°-60°)-30-M5.0	2x T-S-M5.0-(5.0)-...-67° *Special version**	Angle between the two fiber optics is adjustable from 17° to 60°

**Special version*:
Version is different to the standard version (e.g. no standard fiber adapter) and therefore is suitable only for certain sensors or applications

Optical Frontends

Optical frontends for reflected light or transmitted light fiber optics:

Part number:	Suitable for fiber optics type: (R, T = reflected light, D= transmitted light)	Characteristics:
KL-M34-A1.1	R-S-A1.1-(1.5)-...-67°	Working distance typ. 100 mm ... 250 mm
KL-M34-A2.0	R-S-A2.0-(2.5)-...-67°	Working distance typ. 100 mm ... 250 mm
KL-M34-A3.0	R-S-A3.0-(3.0)-...-67°	Working distance typ. 100 mm ... 250 mm
KL-M34-M5.0	T-S-M5.0-(5.0)-...-67° *Special version**	Working distance typ. 100 mm ... 250 mm
KL-M34-M6.0	T-S-M6.0-(6.0)-...-67° *Special version**	Working distance typ. 100 mm ... 250 mm
KL-M34-M8.0	T-S-M8.0-(8.0)-...-67° *Special version**	Working distance typ. 100 mm ... 250 mm
KL-M34-R1.1	R-S-R1.1-(3x0.5)-...-67°	Working distance typ. 100 mm ... 250 mm
KL-M34-R2.1	R-S-R2.1-(6x1)-...-67°	Working distance typ. 100 mm ... 250 mm
KL-M34-XL-A1.1	R-S-A1.1-(1.5)-...-67°	Working distance typ. 50 mm ... 400 mm
KL-M34-XL-A2.0	R-S-A2.0-(2.5)-...-67°	Working distance typ. 50 mm ... 400 mm
KL-M34-XL-A3.0	R-S-A3.0-(3.0)-...-67°	Working distance typ. 50 mm ... 400 mm
KL-M34-XL-M5.0	T-S-M5.0-(5.0)-...-67° *Special version**	Working distance typ. 50 mm ... 400 mm
KL-M34-XL-M6.0	T-S-M6.0-(6.0)-...-67° *Special version**	Working distance typ. 50 mm ... 400 mm
KL-M34-XL-M8.0	T-S-M8.0-(8.0)-...-67° *Special version**	Working distance typ. 50 mm ... 400 mm
KL-M34-XL-(M25x1.5)-M8.0	T-S-M8.0-(8.0)-...-67° *Special version**	as above but with cable screw fitting M25x1.5
KL-M34-XL-R1.1	R-S-R1.1-(3x0.5)-...-67°	Working distance typ. 50 mm ... 400 mm
KL-M34-XL-R2.1	R-S-R2.1-(6x1)-...-67°	Working distance typ. 50 mm ... 400 mm
KL-M34/62-A1.1	R-S-A1.1-(1.5)-...-67°	Working distance typ. 80 mm ... 200 mm
KL-M34/62-A2.0	R-S-A2.0-(2.5)-...-67°	Working distance typ. 80 mm ... 200 mm
KL-M34/62-A3.0	R-S-A3.0-(3.0)-...-67°	Working distance typ. 80 mm ... 200 mm
KL-M34/62-R1.1	R-S-R1.1-(3x0.5)-...-67°	Working distance typ. 80 mm ... 200 mm
KL-M34/62-R2.1	R-S-R2.1-(6x1)-...-67°	Working distance typ. 80 mm ... 200 mm
KL-D-0°/2.5°-300-A2.0	D-S-A2.0-(2.5)-...-67°	Working distance typ. 100 mm ... 500 mm
KL-D-0°/40°-9-A2.0	D-S-A2.0-(2.5)-...-67°	(to be supplemented)
KL-D-0°/42°-9-A2.0	D-S-A2.0-(2.5)-...-67°	(to be supplemented)
KL-D-0°/45°-30-A2.0	D-S-A2.0-(2.5)-...-67°	(to be supplemented)
KL-D-0°/45°-30-A3.0	D-S-A3.0-(3.0)-...-67°	(to be supplemented)
KL-D-5°-85-POL-A2.0	D-S-A2.0-(2.5)-...-67°	(to be supplemented)
KL-D-5°-85-POL-A3.0	D-S-A3.0-(3.0)-...-67°	(to be supplemented)
KL-D-6°-200-A2.0	D-S-A2.0-(2.5)-...-67°	Working distance typ. 100 mm ... 230 mm
KL-D-14°-84-A2.0	D-S-A2.0-(2.5)-...-67°	Working distance typ. 60 mm ... 120 mm
KL-D-14°-84-A2.0-T400	D-S-A2.0-(2.5)-1200-67°-T400	Working distance typ. 60 mm ... 120 mm *thermally stable up to 400°C*
KL-D-17°-49-A2.0	D-S-A2.0-(2.5)-...-67°	Working distance typ. 30 mm ... 80 mm
KL-D-20°-31-A2.0	D-S-A2.0-(2.5)-...-67°	Working distance typ. 10 mm ... 50 mm
KL-D-28°-26-A2.0	D-S-A2.0-(2.5)-...-67°	Working distance typ. 20 mm ... 50 mm
KL-D-28°-26-KG2-A2.0	D-S-A2.0-(2.5)-...-67°	Working distance typ. 20 mm ... 50 mm
KL-D-30°-23-A2.0	D-S-A2.0-(2.5)-...-67°	Working distance typ. 20 mm ... 30 mm
KL-D-30°-23-KG2-A2.0	D-S-A2.0-(2.5)-...-67°	Working distance typ. 20 mm ... 30 mm
KL-D-40°-13-A2.0	D-S-A2.0-(2.5)-...-67°	Working distance typ. 15 mm ... 25 mm
KL-D-40°-23-5/DIF-A2.0	D-S-A2.0-(2.5)-...-67°	(to be supplemented)
KL-D-40°-23-5/DIF-A3.0	D-S-A3.0-(3.0)-...-67°	(to be supplemented)
KL-D-45°-14-A2.0	D-S-A2.0-(2.5)-...-67°	(to be supplemented)
KL-D-M12-0°/30°-9-A2.0	D-S-A2.0-(2.5)-...-67°	(to be supplemented)
KL-D-M12-0°/30°-9-A3.0	D-S-A3.0-(3.0)-...-67°	(to be supplemented)
KL-D-M12-XL-0°/30°-30-A2.0	D-S-A2.0-30°/30-A2.0 *Special version**	Working distance typ. 10 mm ... 100 mm

**Special version*:
Version is different to the standard version (e.g. no standard fiber adapter) and therefore is suitable only for certain sensors or applications

Fiber Optics Fixtures

Mounting brackets (fixtures) for transmitted light fiber optics with sensor head type **„A2.0“, „A3.0“, or „R2.1“:**

Part number:	Suitable for fiber optics type: (D= transmitted light)	Characteristics:
C-MOUNT-A2.0-180°-22/50	D-S-A2.0-(2.5)-...-67°	Transmitter/receiver distance 22 mm, fork width/depth: 50/50 mm
C-MOUNT-A2.0-180°-60/50	D-S-A2.0-(2.5)-...-67°	Transmitter/receiver distance 60 mm, fork width/depth: 60/50 mm
C-MOUNT-A2.0-180°-100/50	D-S-A2.0-(2.5)-...-67°	Transmitter/receiver distance 100 mm, fork width/depth: 100/50 mm
C-MOUNT-A3.0-180°-16/50	D-S-A3.0-(3.0)-...-67°	Transmitter/receiver distance 16 mm, fork width/depth: 50/50 mm
C-MOUNT-A3.0-180°-60/50	D-S-A3.0-(3.0)-...-67°	Transmitter/receiver distance 60 mm, fork width/depth: 94/50 mm
C-MOUNT-A3.0-180°-100/50	D-S-A3.0-(3.0)-...-67°	Transmitter/receiver distance 100 mm, fork width/depth: 100/50 mm
MOUNT-A2.0-170°-5	D-S-A2.0-(2.5)-...-67°	Angle of incidence 85° to the vertical in a distance of 5 mm to the object, gloss control of extremely rough surfaces
MOUNT-A3.0-170°-5	D-S-A3.0-(3.0)-...-67°	Angle of incidence 85° to the vertical in a distance of 5 mm to the object, gloss control of extremely rough surfaces
MOUNT-A2.0-150°-10	D-S-A2.0-(2.5)-...-67°	Angle of incidence 75° to the vertical in a distance of 10 mm to the object, gloss control of rough surfaces
MOUNT-A3.0-150°-10	D-S-A3.0-(3.0)-...-67°	Angle of incidence 75° to the vertical in a distance of 10 mm to the object, gloss control of rough surfaces
MOUNT-A2.0-120°-12	D-S-A2.0-(2.5)-...-67°	Angle of incidence 60° to the vertical in a distance of 12 mm to the object, gloss control of matt to light glossy surfaces
MOUNT-A3.0-120°-12	D-S-A3.0-(3.0)-...-67°	Angle of incidence 60° to the vertical in a distance of 12 mm to the object, gloss control of matt to light glossy surfaces
MOUNT-R1.1-120°-12	D-S-R1.1-(3x0.5)-...-67°	Angle of incidence 60° to the vertical in a distance of 12 mm to the object, gloss control of matt to light glossy surfaces
MOUNT-R2.1-120°-12	D-S-R2.1-(6x1)-...-67°	Angle of incidence 60° to the vertical in a distance of 12 mm to the object, gloss control of matt to light glossy surfaces
MOUNT-A2.0-90°-15	D-S-A2.0-(2.5)-...-67°	Angle of incidence 45° to the vertical in a distance of 15 mm to the object, gloss control of matt to glossy surfaces
MOUNT-A3.0-90°-15	D-S-A3.0-(3.0)-...-67°	Angle of incidence 45° to the vertical in a distance of 15 mm to the object, gloss control of matt to glossy surfaces
MOUNT-A2.0-40°-20	D-S-A2.0-(2.5)-...-67°	Angle of incidence 20° to the vertical in a distance of 20 mm to the object, gloss control of very glossy surfaces
MOUNT-A3.0-40°-20	D-S-A3.0-(3.0)-...-67°	Angle of incidence 20° to the vertical in a distance of 20 mm to the object, gloss control of very glossy surfaces

C-MOUNT-A2.0-180°-.../50
+ D-S-A2.0-(2.5)-...-67°



C-MOUNT-A3.0-180°-.../50
+ D-S-A3.0-(3.0)-...-67°

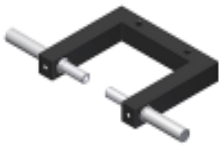

MOUNT-A2.0-170°-5
+ D-S-A2.0-(2.5)-...-67°

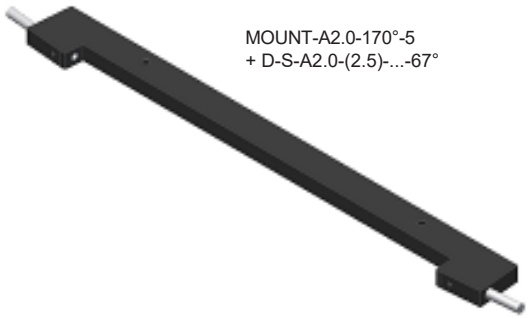

MOUNT-A2.0-150°-10
+ D-S-A2.0-(2.5)-...-67°

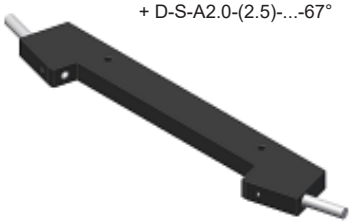

MOUNT-A2.0-120°-12
+ D-S-A2.0-(2.5)-...-67°



MOUNT-A2.0-90°-15
+ D-S-A2.0-(2.5)-...-67°



MOUNT-A2.0-40°-20
+ D-S-A2.0-(2.5)-...-67°



Fiber Optics Fixtures

Mounting brackets (fixtures) for transmitted light fiber optics with sensor head type **„Q....“ (cross-section converter):**

Part number:	Suitable for fiber optics type: (D= transmitted light)	Characteristics:
C-MOUNT-Q1-180°-50/50	D-S-Q1-(5x0.5)-...-67°	Width of measuring range: 5 mm, transmitter/receiver distance: 50 mm, distance beginning of measurement range (inner side) to inner edge of housing: 50 mm
C-MOUNT-Q2-180°-50/50	D-S-Q2-(10x0.3)-...-67°	Width of measuring range: 10 mm, transmitter/receiver distance: 50 mm, distance beginning of measurement range (inner side) to inner edge of housing: 50 mm
C-MOUNT-Q3-180°-50/50	D-S-Q3-(18x0.3)-...-67°	Width of measuring range: 18 mm, transmitter/receiver distance: 50 mm, distance beginning of measurement range (inner side) to inner edge of housing: 50 mm
C-MOUNT-Q4-180°-50/50	D-S-Q4-(28x0.2)-...-67°	Width of measuring range: 28 mm, transmitter/receiver distance: 50 mm, distance beginning of measurement range (inner side) to inner edge of housing: 50 mm
C-MOUNT-Q5-180°-50/50	D-S-Q5-(38x0.15)-...-67°	Width of measuring range: 38 mm, transmitter/receiver distance: 50 mm, distance beginning of measurement range (inner side) to inner edge of housing: 50 mm
C-MOUNT-Q6-180°-50/50	D-S-Q6-(48x0.15)-...-67°	Width of measuring range: 48 mm, transmitter/receiver distance: 50 mm, distance beginning of measurement range (inner side) to inner edge of housing: 50 mm



KL-50/50-5
+ D-S-Q1-(5x0.5)-...-67°

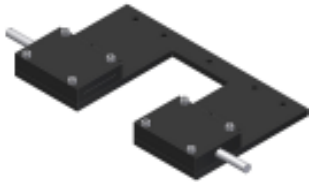

KL-50/50-28
+ D-S-Q4-(28x0.2)-...-67°

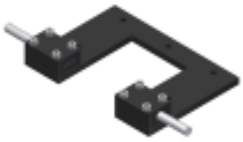

KL-50/50-10
+ D-S-Q2-(10x0.3)-...-67°

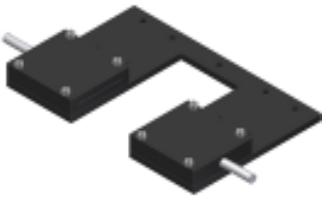

KL-50/50-38
+ D-S-Q5-(38x0.15)-...-67°

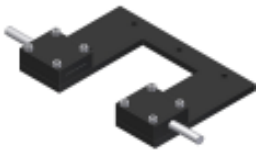

KL-50/50-18
+ D-S-Q3-(18x0.3)-...-67°

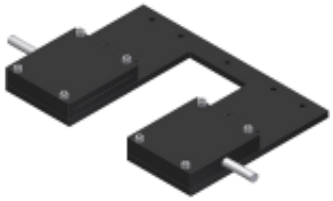

KL-50/50-48
+ D-S-Q6-(48x0.15)-...-67°