SPECTRO Series

SPECTRO-3-30-DIL-JR



- Measuring range typ. 15 mm ... 80 mm
- Reduction of gloss effect due to diffuse illumination
- Up to 31 colors can be stored
- RS232 interface (USB or Ethernet converter available)
- 8x super-bright white-light LED, diffuse (AC-/DC-/PULSE-operation or OFF for luminous objects can be switched)
- Color detection, contrast detection, and gray scale detection
- Insensitive to outside light (in AC- or PULSE-operation)
- Brightness correction can be activated (STAT/DYN)
- Scan frequency max. 35 kHz (in DC- or OFF-operation)
- Switching frequency max. 60 kHz
- TEACH via PC or PLC (external input)
- Various evaluation algorithms can be activated
- "BEST HIT" mode ("human color assessment")
- Parameterizable via Windows® software, scope function
- Temperature compensated
- Averaging can be activated (from 1 up to over 32000 values)
- Color control of luminous objects (LEDs, halogen lamps, displays, ...)
- 3-color filter detector (true color detector: "human color perception")

Design

Product name:

SPECTRO-3-30-DIL-JR
(incl. Windows® PC software SPECTRO3-Scope and SPECTRO3-COMFORT-Scope)

Accessories: (p. 9)

MOUNT-SPECTRO-3-JR/CL
(Monunting unit)

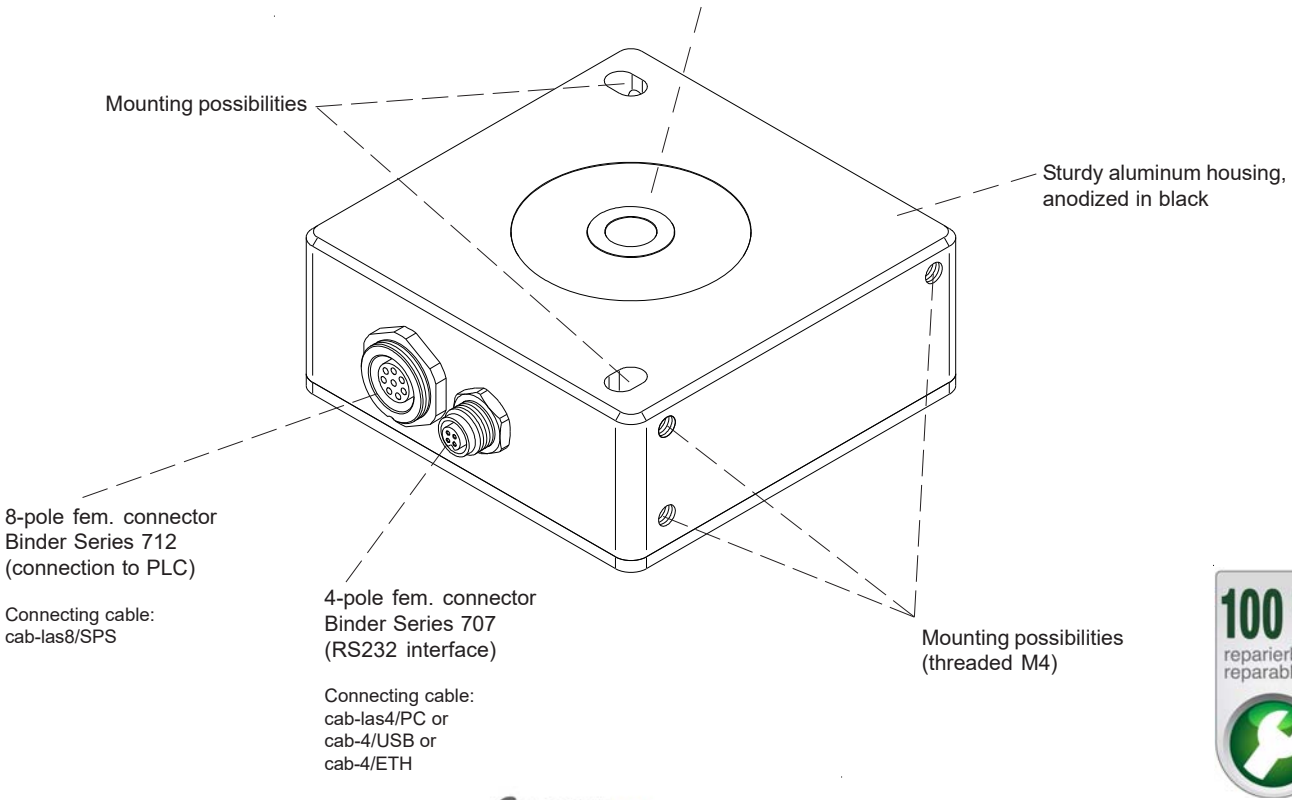

100 % reparierbar/ reparable* * ausgenommen Totalschaden/ excluding total loss

Technical Data

Model	SPECTRO-3-30-DIL-JR
Voltage supply	+24VDC (± 10%), reverse polarity protected, overcurrent protected
Current consumption	< 220 mA
Max. switching current	100 mA, short circuit proof
Input digital (1x)	IN0 (Pin 3), digital (0V/+24V)
Outputs digital (5x)	OUT0 ... OUT4 (Pin 4 ... 8): digital (0V/+24V), npn-/pnp-able (bright-/dark-switching, can be switched)
Interface	RS232
Pulse lengthening	0 ... 100 ms, adjustable via PC software
Averaging	max. 32768 values, adjustable via PC software
Scan frequency	LED operation, can be switched via PC software: AC operation: max. 20 kHz (depends on parameterization) DC and OFF operation: max. 35 kHz (depends on parameterization) PULSE operation: max. 5 kHz (depends on parameterization)
Switching frequency	max. 60 kHz
Transmitter (light source)	8x super-bright white-light LED, diffuse
Transmitter control	can be switched via PC software: AC operation (LED MODE-AC), DC operation (LED MODE-DC), OFF operation (LED MODE-OFF) or PULSE operation (LED MODE-PULSE)
Measuring range	typ. 15 mm ... 80 mm
Receiver	3-color filter detector (TRUE COLOR detector, “human color perception“), color filter curves acc. to CIE 1931
Receiver gain setting	8 steps (AMP1 ... AMP8), adjustable via PC software
Ambient light	max. 5000 Lux
Detection range (half intensity width)	typ. 10 mm at a distance of 15 mm typ. 12 mm at a distance of 30 mm typ. 17 mm at a distance of 45 mm typ. 23 mm at a distance of 60 mm typ. 30 mm at a distance of 75 mm
Reproducibility	in the X, Y color range each 1 digit at 12-bit A/D conversion
Temperature drift X,Y	ΔX/ΔT; ΔY/ΔT typ. 0,2 digits/°C (< 0,01% / °C)
Color difference	ΔE >= 0,5
Color space	X Y INT siM (Lab)
Color memory capacity	non-volatile EEPROM with parameter sets for max. 31 colors
Housing dimensions	LxWxH approx. 65 mm x 65 mm x 26 mm (without flange connectors)
Housing material	aluminum, anodized in black
Enclosure rating	IP64
Connecting cables	to PLC: cab-las8/SPS or cab-las8/SPS-w to PC/RS232 interface: cab-las4/PC or cab-las4/PC-w to PC/USB interface: cab-4/USB or cab-4/USB-w to PC/Ethernet interface: cab-4/ETH
Type of connector	connection to PLC: 8-pole fem. connector (Binder 712), connection to PC: 4-pole fem. connector (Binder 707)
Operating temp. range	-20°C ... +55°C
Storage temperature range	-20°C ... +85°C
EMC test acc. to	DIN EN 60947-5-2 CE

Dimensions

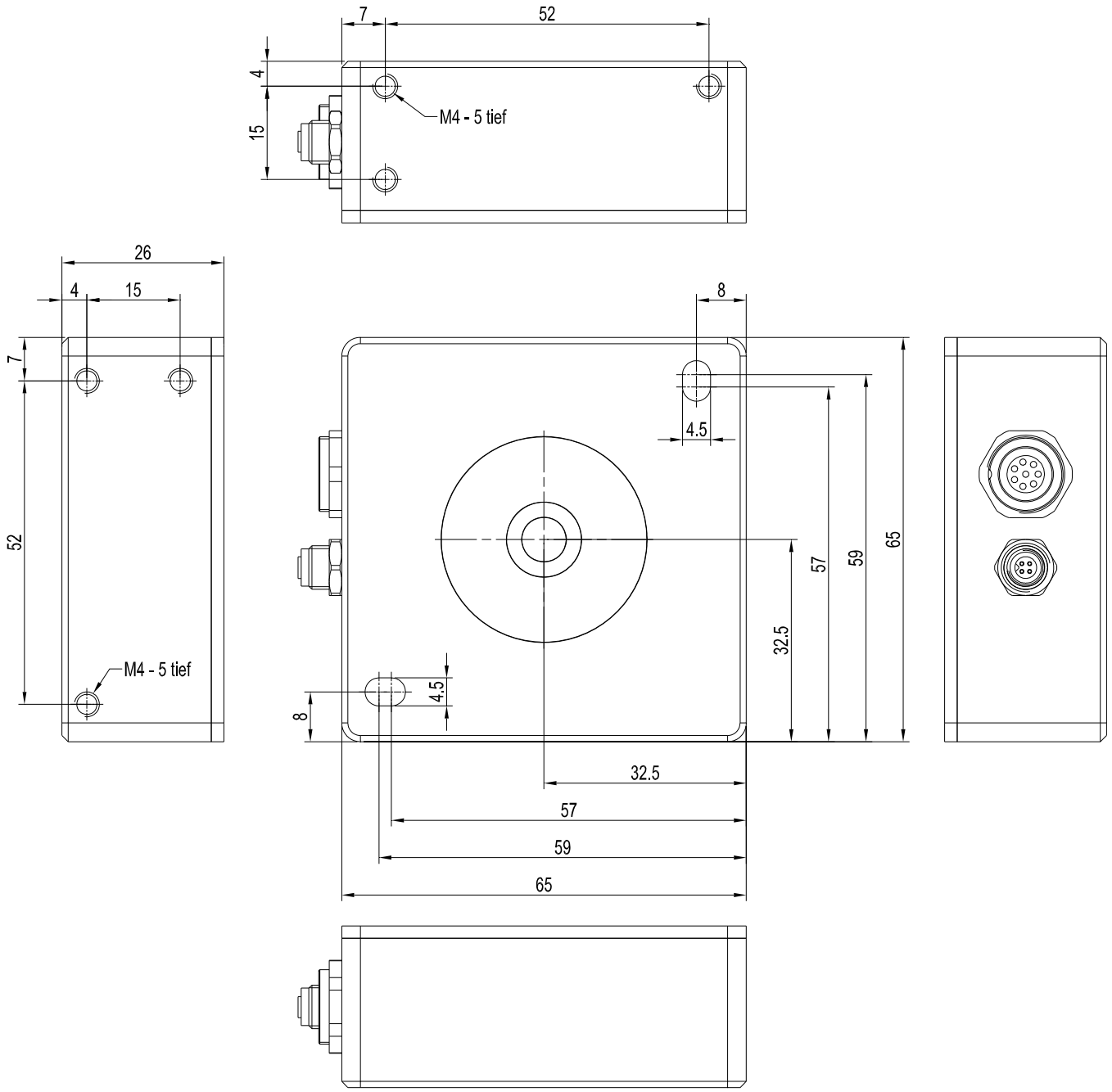

All dimensions in mm

Connector Assignment

Connection to PLC:
8-pole fem. connector Binder Series 712

Pin:	Color:	Assignment:
1	white	GND (0V)
2	brown	+24VDC (±10%)
3	green	IN0
4	yellow	OUT0 (Digital 0: typ. 0…1V, Digital 1: typ. +Ub - 10%)
5	grey	OUT1 (Digital 0: typ. 0…1V, Digital 1: typ. +Ub - 10%)
6	pink or black	OUT2 (Digital 0: typ. 0…1V, Digital 1: typ. +Ub - 10%)
7	blue	OUT3 (Digital 0: typ. 0…1V, Digital 1: typ. +Ub - 10%)
8	red	OUT4 (Digital 0: typ. 0…1V, Digital 1: typ. +Ub - 10%)

Connecting cable:
cab-las8/SPS-(length)
cab-las8/SPS-w-(length) (angle type, 90°)
(standard length 2m)

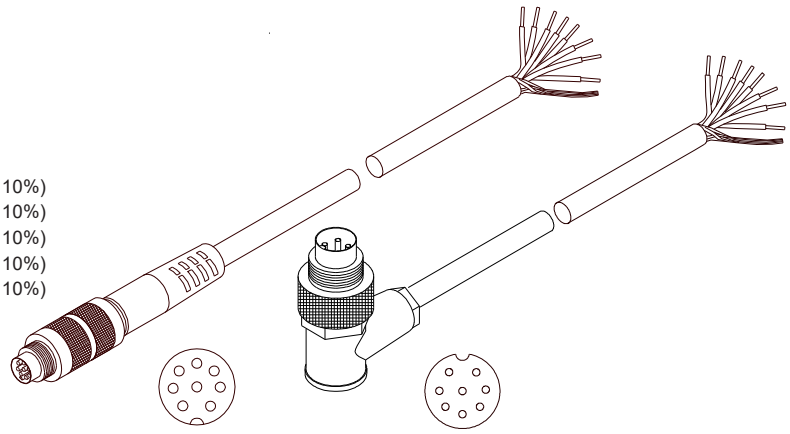

cab-las8/SPS-...
(max. length 25m, outer jacket: PUR)

cab-las8/SPS-w-...
(max. length 25m, outer jacket: PUR)

Connection to PC:
4-pole fem. connector Binder Series 707

Pin:	Assignment:
1	+24VDC (+Ub, OUT)
2	GND (0V)
3	RxD
4	TxD

Connection via RS232 interface at the PC:
Connecting cable:
cab-las4/PC-(length)
cab-las4/PC-w-(length) (angle type 90°)
(standard length 2m)

alternative:
Connection via USB interface at the PC:
USB converter (incl. driver software):
cab-4/USB-(length)
cab-4/USB-w-(length) (angle type 90°)
(standard length 2m)

alternative:
Connection to local network via Ethernet bus:
Ethernet converter (incl. software „SensorFinder“):
cab-4/ETH-500
(standard length 0.5m)

Optional: External CAT5 cable, e.g.
cab-eth/M12D-RJ45-flx-(length)

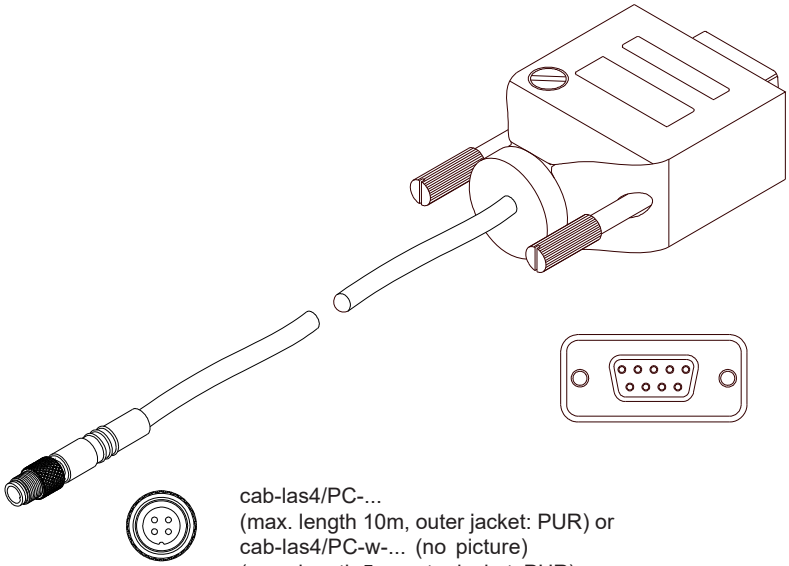

cab-las4/PC-...
(max. length 10m, outer jacket: PUR) or
cab-las4/PC-w-... (no picture)
(max. length 5m, outer jacket: PUR)

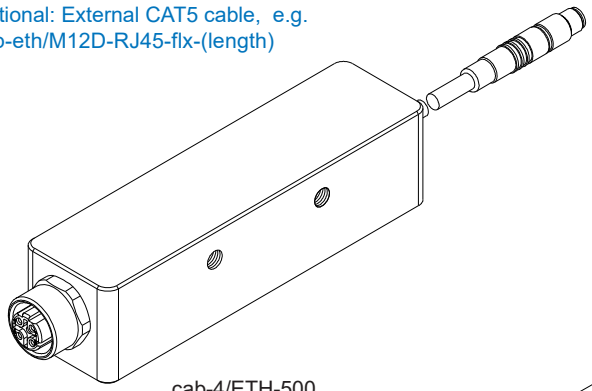

cab-4/ETH-500
(length 0.5m, outer jacket: PUR)
4-pole M12 fem. conn. (D-coded)
for connection of an external
CAT5 cable, e.g.
cab-eth/M12D-RJ45-flx-(length)

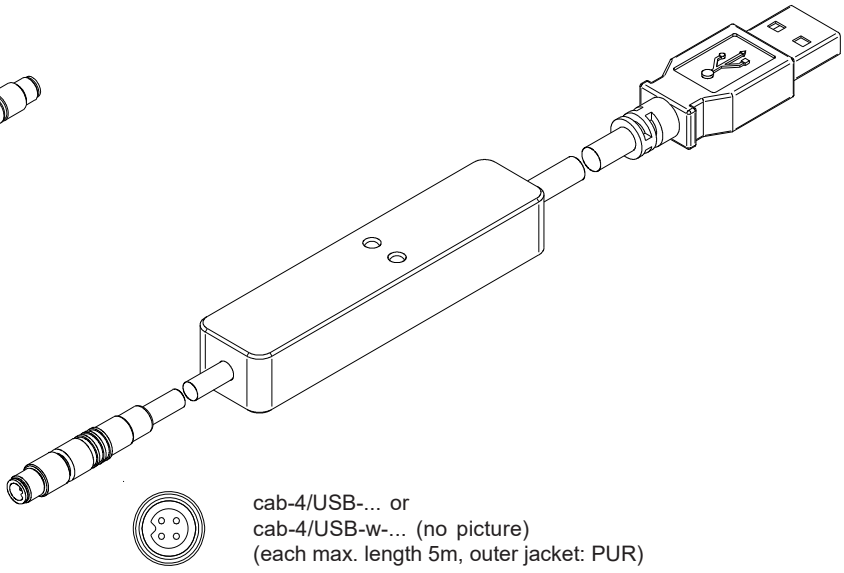

cab-4/USB-... or
cab-4/USB-w-... (no picture)
(each max. length 5m, outer jacket: PUR)

Measuring Principle

Measuring principle of the color sensors of SPECTRO-3 series:

The SPECTRO-3 provides highly flexible signal acquisition. For example, the sensor can be operated in alternating-light mode (AC mode), which makes the sensor insensitive to extraneous light. It also can be set to constant-light mode (DC mode), which makes the sensor extremely fast and allows a scan-frequency of up to 35 kHz. An OFF function turns off the integrated light source at the sensor and changes to DC operation. The sensor then can detect so-called „self-luminous objects“.
In PULSE operation extremely dark surfaces can be reliably detected. With the stepless adjustment of the integrated light source as well as the selectable gain of the receiver signal and an INTEGRAL function the sensor can be set to almost any surface or any “self-luminous object“.

When the integrated light source of the SPECTRO-3 color sensor is activated, the sensor detects the radiation that is diffusely reflected from the object. As a light source the SPECTRO-3 color sensor uses a white-light LED with adjustable transmitter power. An integrated 3-fold receiver for the red, green, and blue content of the light that is reflected from the object, or the light that is emitted by a „self-luminous object“, is used as a receiver.

The SPECTRO-3 color sensor can be „taught“ up to 31 colors. For each of these taught colors it is possible to set tolerances. In „X Y INT - 2D“ or „s i M - 2D“ mode these tolerances form a color cylinder in space. In „X Y INT - 3D“ or „s i M - 3D“ mode the tolerances form a color sphere in space. Color evaluation according to „s i M - 2D“ is based on the lab calculation method. All modes can be used in combination with several operating modes such as „FIRST HIT“ and „BEST HIT“. Raw data are represented with 12 bit resolution.

As a special feature the sensor can be taught two completely independent parameter sets. Input IN0 can then be used to tell the sensor which parameter set it should work with.

Color detection either operates continuously or is started through an external PLC trigger signal. The respective detected color either is provided as a binary code at the 5 digital outputs or can be sent directly to the outputs, if only up to 5 colors are to be detected. At the same time the detected color code is visualised by means of 5 LEDs at the housing of the SPECTRO-3.
[Please note: Visualisation by means of LEDs not available with SPECTRO-3-…-JR types.]

With a TEACH button at the sensor housing the color sensor can be taught up to 31 colors. For this purpose the corresponding evaluation mode must be set with the software. The TEACH button is connected in parallel to the input IN0 (green wire at cable cab-las8/SPS). [Please note: TEACH button not available with SPECTRO-3-…-JR types.]

Parameters and measurement values can be exchanged between a PC and the SPECTRO-3 color sensor through the serial RS232 interface. All the parameters for color detection also can be saved to the non-volatile EEPROM of the SPECTRO-3 color sensor through this serial RS232 interface. When parameterisation is finished, the color sensor continues to operate with the current parameters in STAND-ALONE mode without a PC.

The sensors of the SPECTRO-3 series can be calibrated (white-light balancing). Balancing can be performed to any white surface. A ColorChecker™ table with 24 color fields is available as an alternative. White-light balancing or calibration can be performed to one of the white fields.

Parameterization

Windows® user interface:

(The current software version is available for download on our website.)

The color sensor is parameterized under Windows® with the SPECTRO3-Scope software. The Windows® user interface facilitates the teach-in process at the color sensor and supports the operator in the task of adjustment and commissioning of the color sensor. Moreover, the software features a data recorder function that allows the automatic recording of recorded data and the saving of those at the hard disk of the PC.

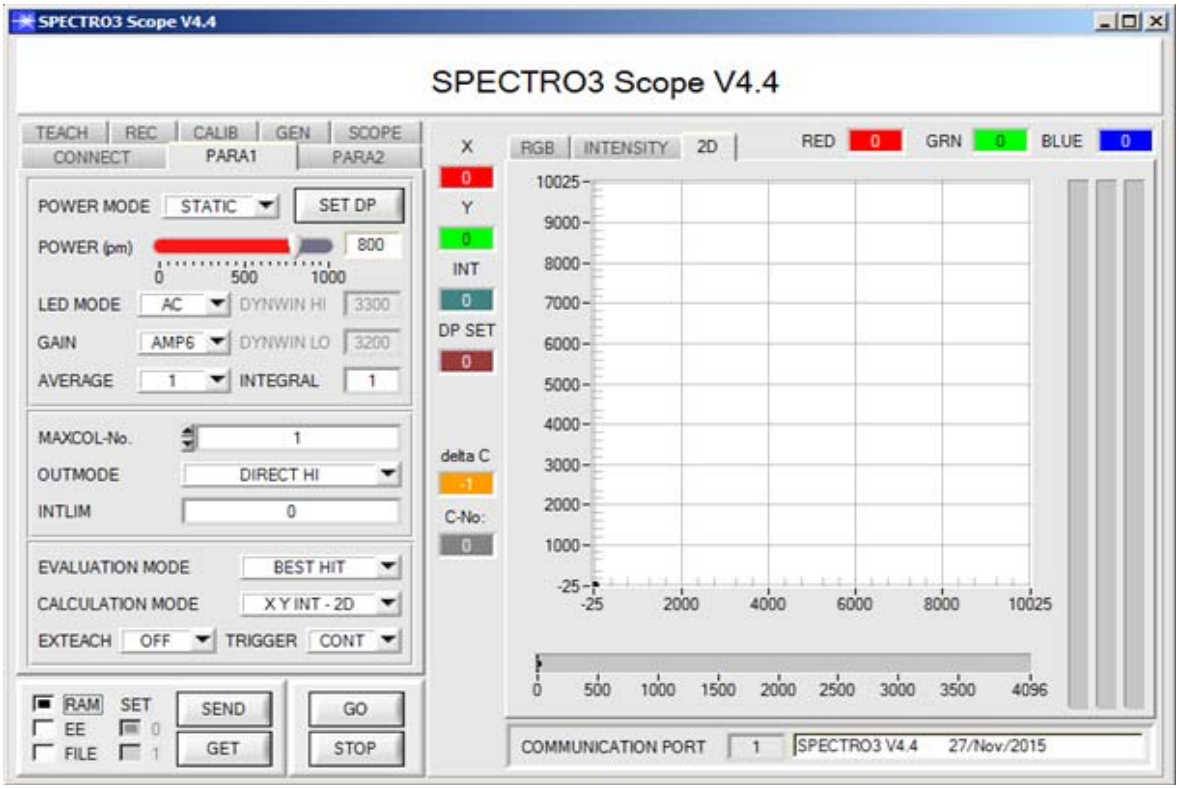

Under Windows® representation of the color value on a PC in numeric form and in a color chart, and representation of RGB values in a time chart. In addition the current RGB values are displayed as a bar chart.

Parameters and measurement values can be exchanged between PC and sensor either through RS232 or Ethernet (using an Ethernet adaptor). Through the interface all the parameters can be stored in the non-volatile EEPROM of the sensor.
Tab PARA1 and PARA2 are used for setting parameters such as:

- POWER MODE: Light power of the LED
- LED MODE: Triggering of the internal light source
- GAIN: Used for setting the gain of the receiver
- AVERAGE: Averaging over a maximum of 32768 values
- INTEGRAL: This function field is used to set the number of scan values (measurement values) over which the raw signal measured at the receiver is summed up. This integral function allows the reliable detection even of extremely weak signals
- MAXCOL-No.: Number of colors to be checked
- OUTMODE: Triggering of the digital outputs
- INTLIM: Minimum intensity required for color evaluation
- EVALUATION MODE: Various evaluation modes to choose from (FIRST HIT, BEST HIT, MIN DIST, COL5, THD RGB)
- CALCULATION MODE: There are 2 methods of teaching a color, which are selectable via CALCULATION MODE. The CALCULATION MODE „X Y INT - 3D“ (or „s i M - 3D“) uses a color sphere in space with radius TOL. Contrary to this, the CALCULATION MODE „X Y INT - 2D“ (or „s i M - 2D“) uses a color cylinder in space with radius CTO or siTO and with height ITO or M. The teach process is the same for both methods. Color evaluation according to "s i M - 2D" uses the Lab calculation method
- EXTEACH: In all the evaluation modes teaching of a color can be performed externally through IN0 or by means of the button at the sensor housing [Please note: TEACH button not available with SPECTRO-3-…-JR types.]
- TRIGGER: Continuous or external or self trigger

Parametrization

Windows® user interface SPECTRO3-COMFORT-Scope as an alternative to SPECTRO3-Scope:

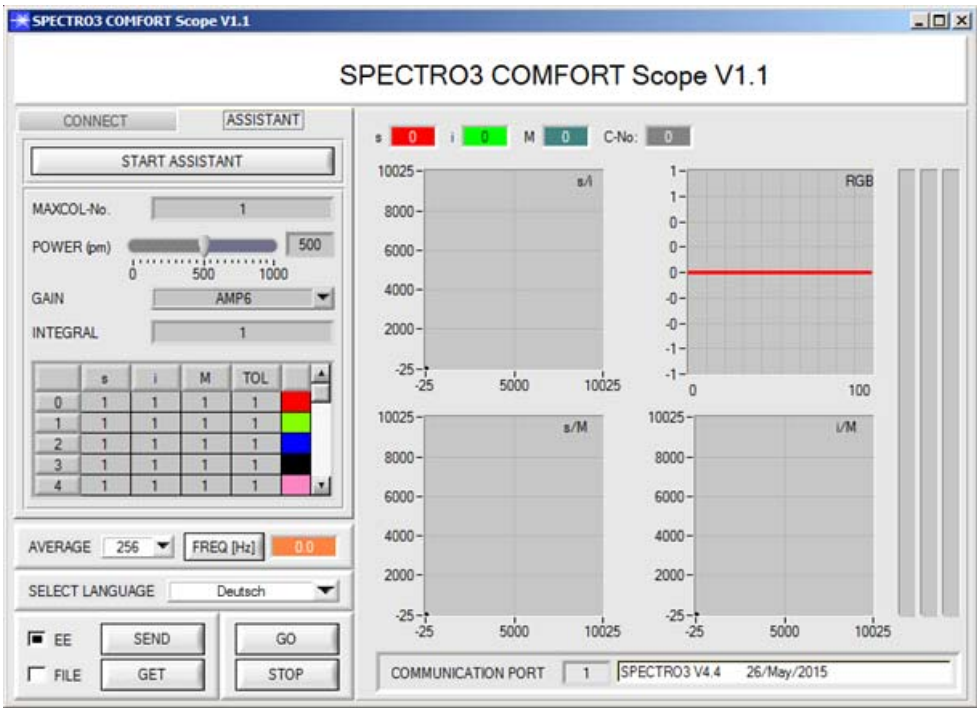

Color sensors of the following types can be quickly parameterised with the SPECTRO3-COMFORT-SCOPE software:

SPECTRO-3 (im M34 housing)
SPECTRO-3-CL
SPECTRO-3-JR
SPECTRO-3-SL
SPECTRO-3-SLE

The software features menu guidance that prompts the user to enter all the relevant parameters.

Firmware Update

Firmware update by means of software „ProgramLoader“ or „FirmwareLoader“:

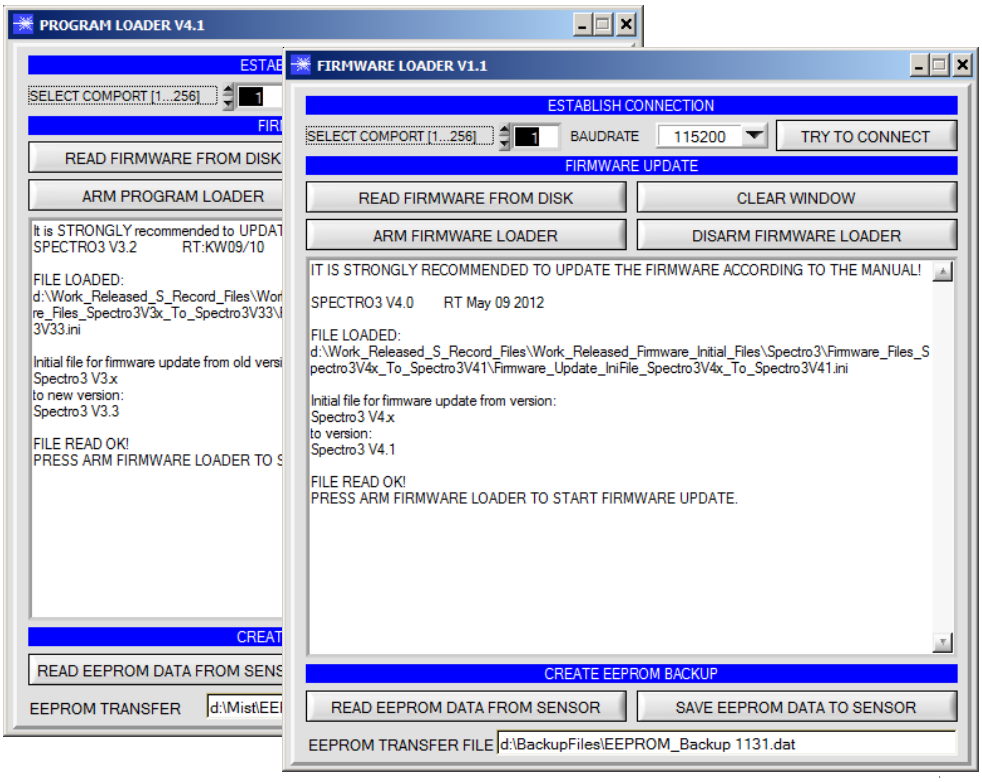

The software „ProgramLoader“ or „FirmwareLoader“ allows the user to perform an automatic firmware update. The update will be carried out through the RS232 interface.

An initialisation file (xxx.ini) and a firmware file (xxx.elf.S) are required for performing a firmware update. These files can be obtained from your supplier. In some cases an additional firmware file for the program memory (xxx.elf.p.S) is also needed, and this file will be automatically provided together with the other two files.

Diagrams

Diagrams: **DETECTION RANGE (HALF INTENSITY WIDTH) and RELATIVE INTENSITY**
SPECTRO-3-30-DIL-JR

Detection range (half intensity width d)
SPECTRO-3-30-DIL-JR:
12 mm (typ.) at a working distance of 30 mm

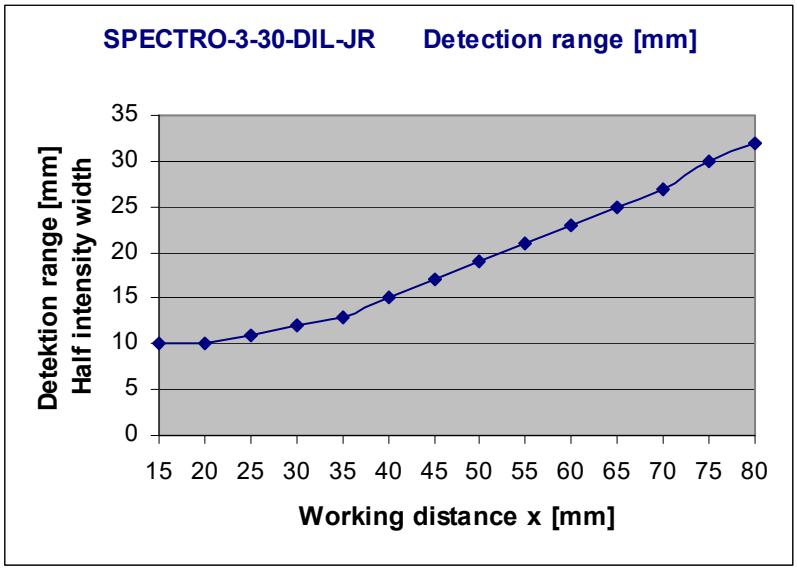

Relative intensity
SPECTRO-3-30-DIL-JR:
100% at a working distance of 15 mm
(INTENSITY 3636)

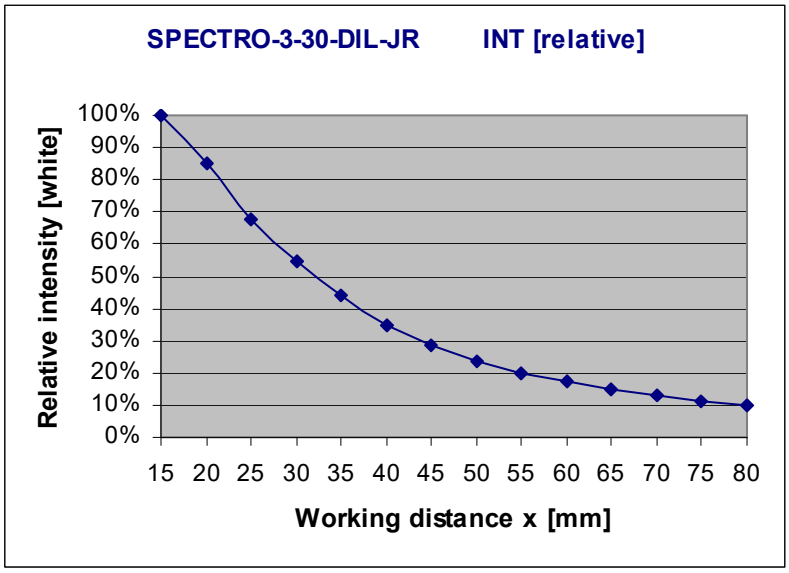

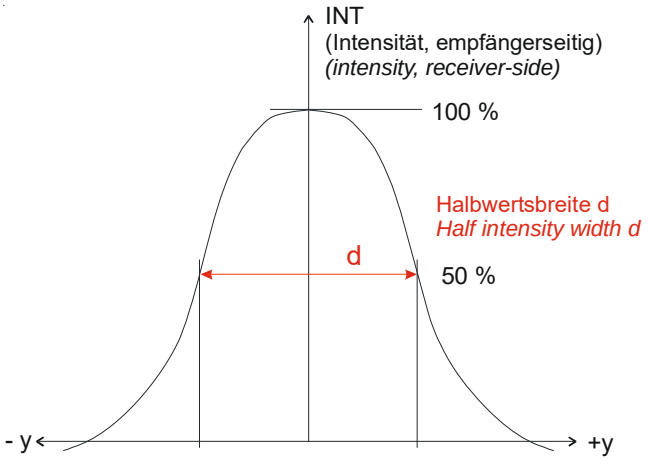

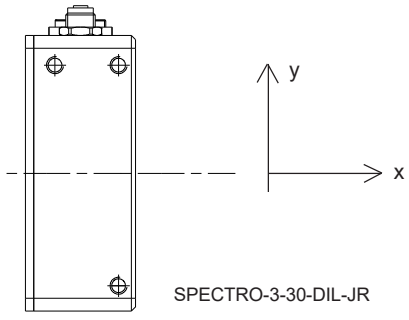

Accessories

Mounting unit
MOUNT-SPECTRO-3-JR/CL
(please order separately)



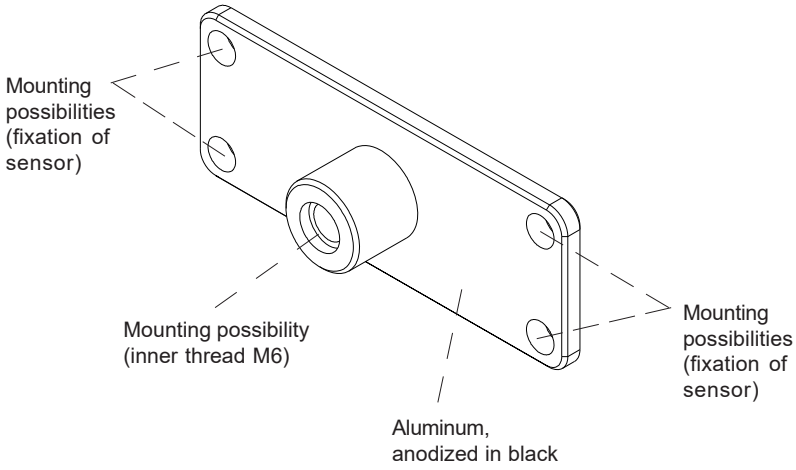

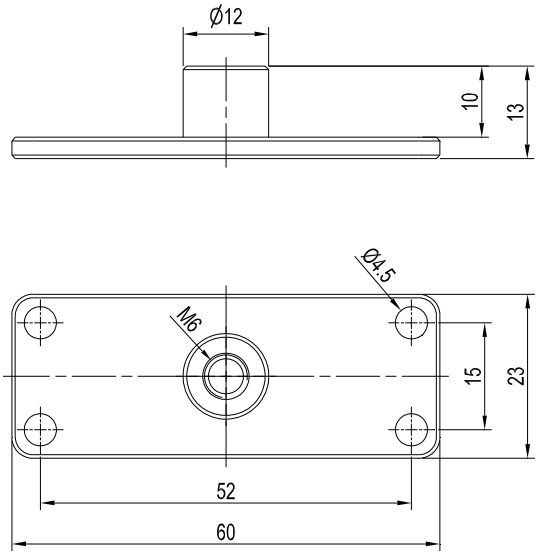

(All dimensions in mm)

Example of use:

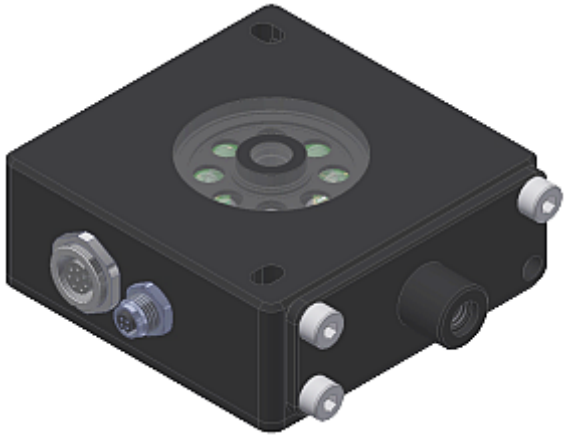

Example:
MOUNT-SPECTRO-3-JR/CL mounting unit
mounted on SPECTRO-3-50-FCL-JR color sensor