SPECTRO Series

SPECTRO-3-SLU-SA-ANA + SI-SLU-DIF-16



- Measuring range in reflected light operation typ. up to max. 100 mm, in transmitted light operation typ. up to max. 500 mm
- Up to 3 colors (max. 64 in group mode) can be stored
- RS232 interface (USB or Ethernet adapter available)
- External transmitter unit with 16 warm-white LED, diffuse (AC-/DC-operation or OFF for luminous objects can be switched)
- Color detection, contrast detection, and gray scale detection
- Insensitive to outside light (in AC-operation)
- Brightness correction can be activated (STAT/DYN)
- Scan frequency max. 90 kHz (in DC- or OFF-operation)
- Switching frequency typ. 60 kHz
- 3 analog outputs to output color values to PLC
- 2 digital outputs to output taught colors
- TEACH via PC or PLC (external input)
- Various evaluation algorithms can be activated
- “BEST HIT“ mode (“human color assessment“)
- Parameterizable via Windows® software, scope function
- Temperature compensated
- Averaging can be activated (from 1 up to over 32000 values)
- Color control of luminous objects (LEDs, halogen lamps, displays, ...)
- 3-color filter detector (true color detector: “human color perception“)

Design

Product name:

SPECTRO-3-SLU-SA-ANA (electronic control unit/receiver)
(incl. Windows® PC software SPECTRO3-ANA Scope)

SI-SLU-DIF-16 (side light unit/transmitter)
(please order separately)

Accessories: (p. 10-15)

MOUNT-SLU-10°/10°-210
MOUNT-SLU-20°/20°-100
MOUNT-SLU-45°/45°-55
MOUNT-SLU-60°/60°-55
MOUNT-SLU-80/200
MOUNT-SLU-80/500
Mounting units for reflected light or transmitted light operation

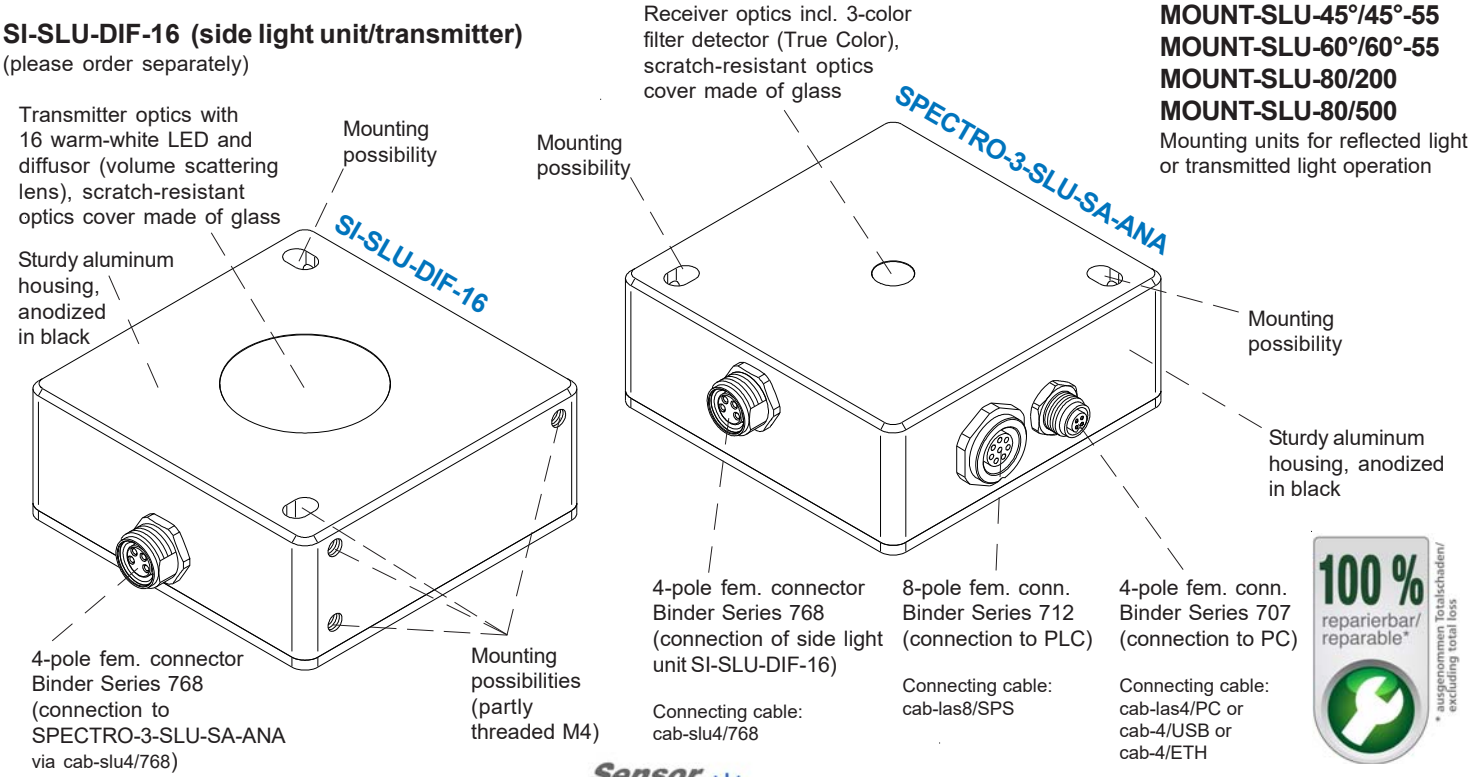

Technical Data

Model	SPECTRO-3-SLU-SA-ANA + SI-SLU-DIF-16
Voltage supply	+24VDC (± 10%), reverse polarity protected, overcurrent protected
Current consumption	< 300 mA
Max. switching current	100 mA, short circuit proof
Input digital (1x)	IN0 (Pin 3), digital (0V/+24V)
Outputs digital (2x)	OUT0, OUT1 (Pin 4, 5): digital (0V/+24V), npn-/pnp-able (bright-/dark-switching, can be switched)
Outputs analog (3x)	OUT2, OUT3, OUT4 (Pin 6, 7, 8): voltage 0...+10V or current 4...20mA (R,G,B or X,Y,INT or s,i,M)
Interface	RS232
Pulse lengthening	0 ... 100 ms, adjustable via PC software
Averaging	max. 32768 values, adjustable via PC software
Scan frequency	LED operation, can be switched via PC software: AC operation: max. 25 kHz (depends on parameterization) DC and OFF operation: max. 90 kHz (depends on parameterization)
Switching frequency	typ. 60 kHz
Analog band width	max. 90 kHz (-3dB)
Transmitter (light source)	16x warm-white LED, diffuse (diffusor = volume scattering lens)
Transmitter control	can be switched via PC software: AC operation (LED MODE-AC), DC operation (LED MODE-DC), OFF operation (LED MODE-OFF)
Measuring range	reflected light operation: typ. up to max 100 mm transmitted light operation: typ. up to max 500 mm
Receiver	3-color filter detector (TRUE COLOR detector, “human color perception“), color filter curves acc. to CIE 1931
Receiver gain setting	8 steps (AMP1 ... AMP8), adjustable via PC software
Ambient light	max. 5000 Lux
Size of light spot	depends on position of side light unit (transmitter) to the measurement object
Reproducibility	in the X, Y color range each 1 digit at 12-bit A/D conversion
Temperature drift X,Y	ΔX/ΔT; ΔY/ΔT typ. 0,2 digits/°C (< 0,01% / °C)
Color difference	ΔE >= 0,5
Color space	X Y INT siM (Lab)
Color memory capacity	non-volatile EEPROM with parameter sets for max. 3 colors (max. 64 colors in group mode)
Housing dimensions	electronic control unit: LxWxH approx. 65 mm x 65 mm x 26 mm (without connector flanges) side light unit: LxWxH approx. 65 mm x 65 mm x 26 mm (without connector flanges)
Housing material	aluminum, anodized in black
Enclosure rating	electronic control unit: IP67 (optics), IP64 (electronics) side light unit: IP64
Connecting cables	SPECTRO-3-SLU-SA-ANA to PLC: cab-las8/SPS or cab-las8/SPS-w or SPECTRO-3-SLU-SA-ANA to PC/RS232-interface: cab-las4/PC or cab-las4/PC-w or SPECTRO-3-SLU-SA-ANA to PC/USB-interface: cab-4/USB or cab-4/USB-w SPECTRO-3-SLU-SA-ANA to PC/Ethernet-interface: cab-4/ETH SPECTRO-3-SLU-SA-ANA to side light unit SI-SLU-DIF-16: cab-slu4/768
Type of connector	connection SPECTRO-3-SLU-SA-ANA to PLC: 8-pol. fem. connector (Binder series 712) connection SPECTRO-3-SLU-SA-ANA to PC: 4-pol. fem. connector (Binder series 707) connection SPECTRO-3-SLU-SA-ANA to SI-SLU-DIF-16: 4-pol. M8 fem. connector (Binder series 768)
Temperature ranges	operating temperature range: -20°C ... +55°C, storage temperature range: -20°C ... +85°C
EMC test acc. to	DIN EN 60947-5-2 CE

Abmessungen

SPECTRO-3-SLU-SA-ANA

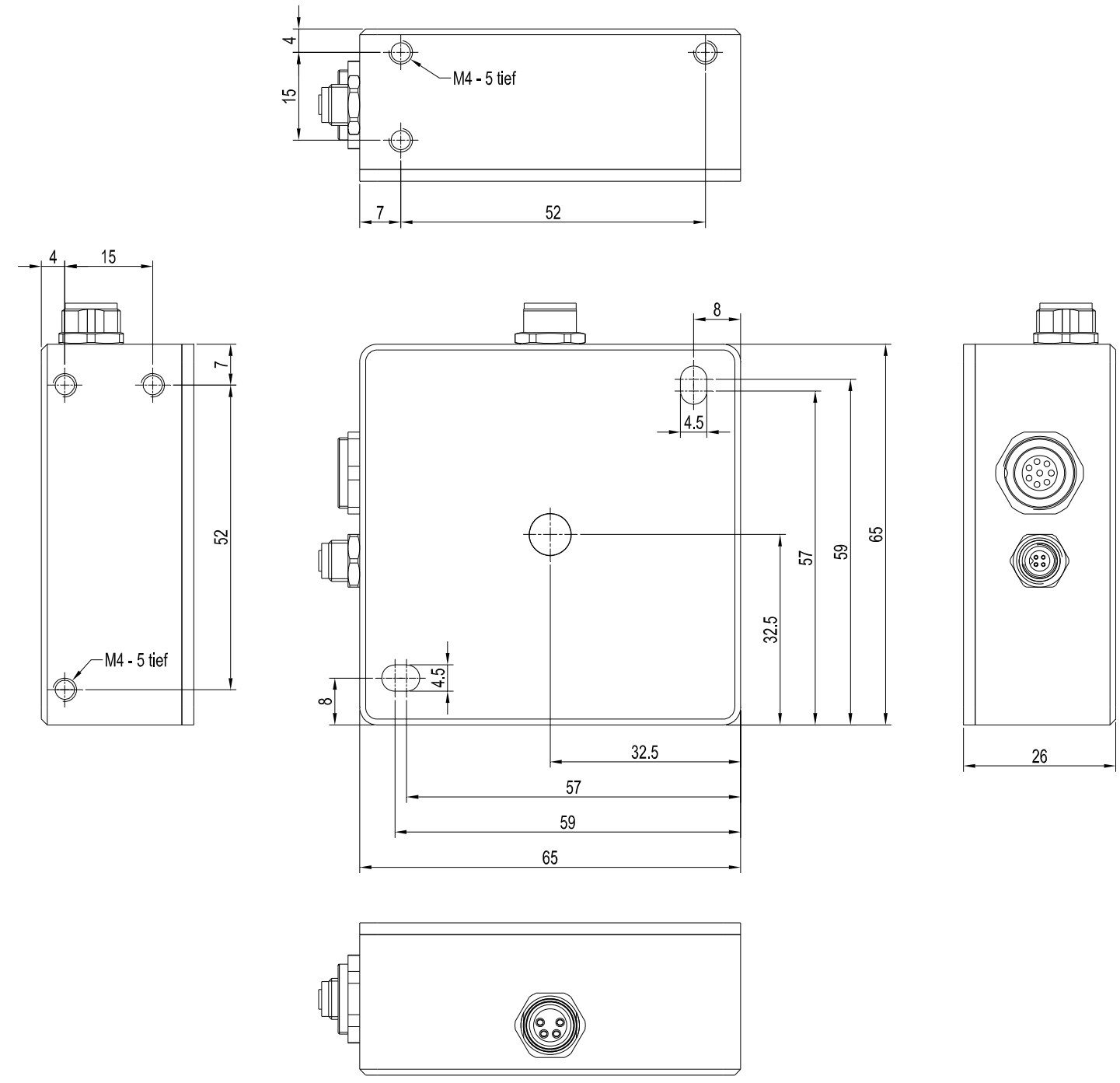

All dimensions in mm

Dimensions

SI-SLU-DIF-16

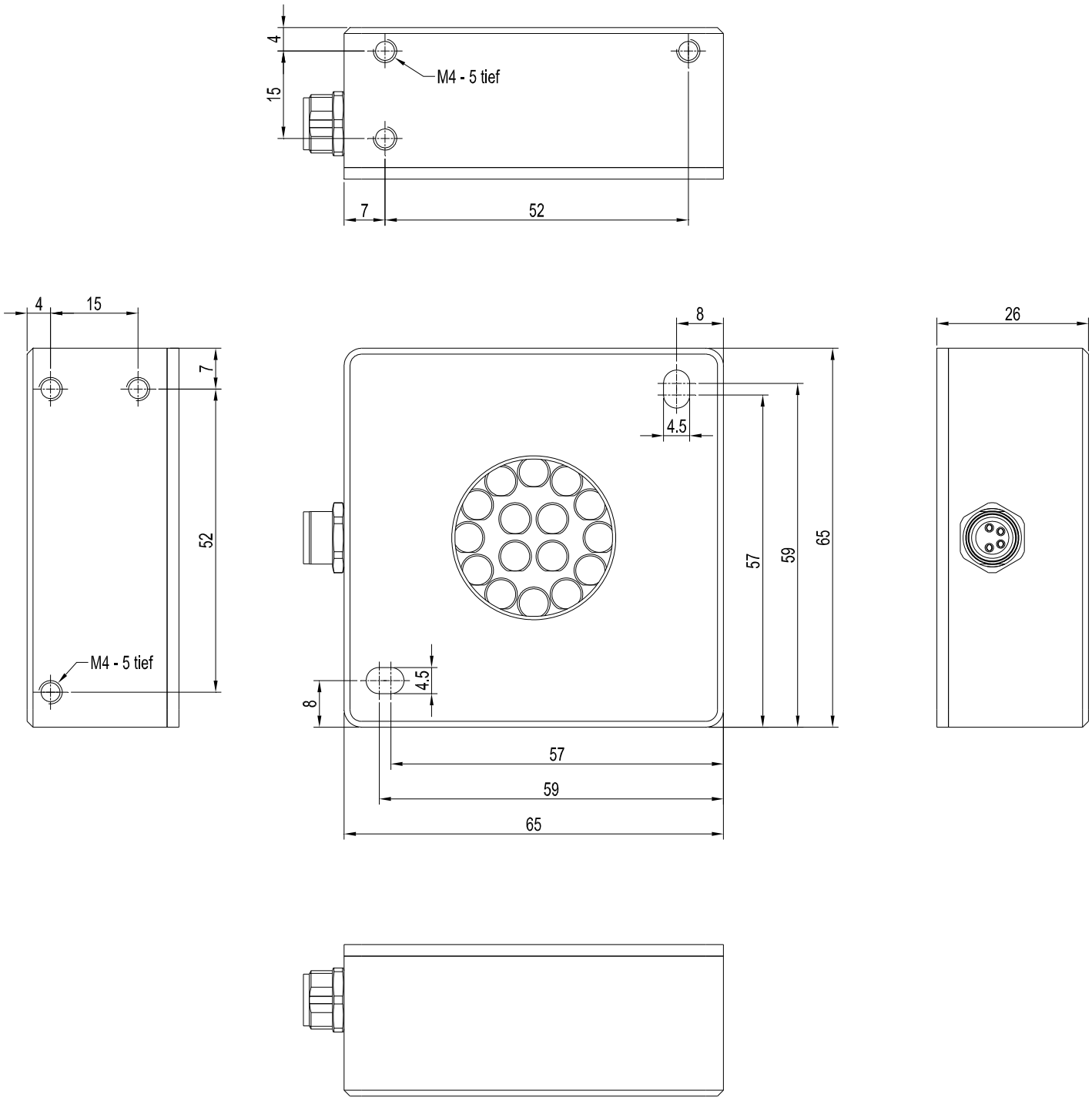

All dimensions in mm

Connector Assignment

Connection to PLC:
8-pole fem. connector Binder Series 712

Pin:	Color:	Assignment:
1	white	GND (0V)
2	brown	+24VDC (±10%)
3	green	IN0
4	yellow	OUT0 (Digital 0: 0 … 1V, Digital 1: +Ub -10%)
5	grey	OUT1 (Digital 0: 0 … 1V, Digital 1: +Ub -10%)
6	pink or black	OUT2 (Analog R or X or s: 0 ... +10V or 4 ... 20mA)
7	blue	OUT3 (Analog G or Y or i: 0 ... +10V or 4 ... 20mA)
8	red	OUT4 (Analog B or INT or M: 0 ... +10V or 4 ... 20mA)

Connecting cable:
cab-las8/SPS-(length)
cab-las8/SPS-w-(length) (angle type, 90°)
(standard length 2m)

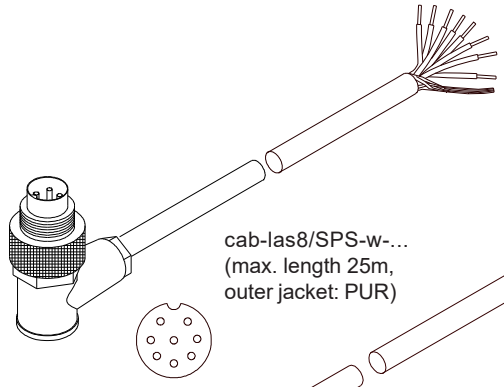

cab-las8/SPS-w-...
(max. length 25m,
outer jacket: PUR)

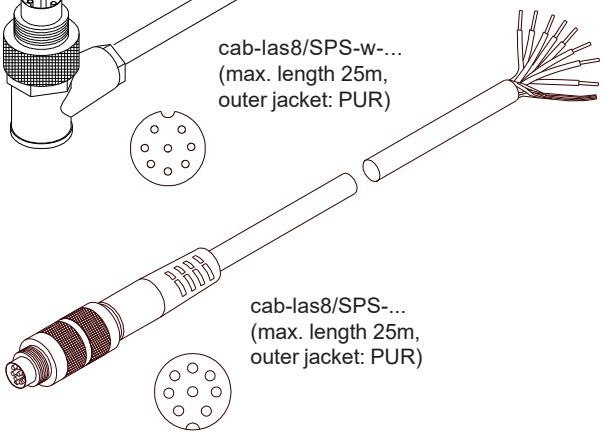

cab-las8/SPS-...
(max. length 25m,
outer jacket: PUR)

Connection to PC:
4-pole fem. connector Binder Series 707

Pin:	Assignment:
1	+24VDC (+Ub, OUT)
2	GND (0V)
3	RxD
4	TxD

Connection via RS232 interface at the PC:
Connecting cable:
cab-las4/PC-(length)
cab-las4/PC-w-(length) (angle type 90°)
(standard length 2m)

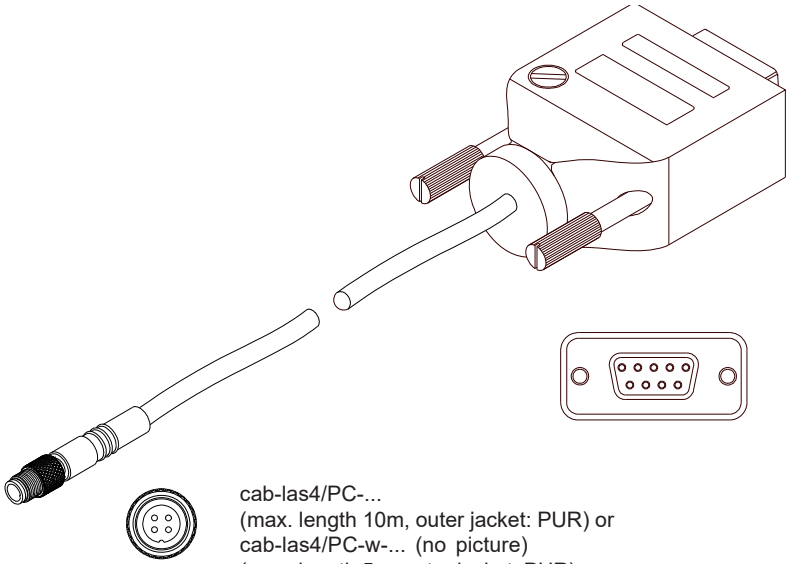

cab-las4/PC-...
(max. length 10m, outer jacket: PUR) or
cab-las4/PC-w-... (no picture)
(max. length 5m, outer jacket: PUR)

alternative:
Connection via USB interface at the PC:
Connecting cable (incl. driver software):
cab-4/USB-(length)
cab-4/USB-w-(length) (angle type 90°)
(standard length 2m)

alternative:
Connection to local network via Ethernet bus:
Adapter (incl. software „SensorFinder“):
cab-4/ETH-500
(standard length 0.5m)

Optional: External CAT5 cable, e.g.
cab-eth/M12D-RJ45-flx-(length)

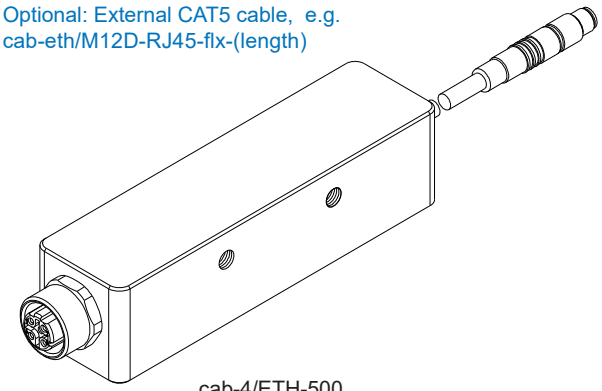

cab-4/ETH-500
(length 0.5m, outer jacket: PUR)
4-pole M12 fem. conn. (D-coded)
for connection of an external
CAT5 cable, e.g.
cab-eth/M12D-RJ45-flx-(length)

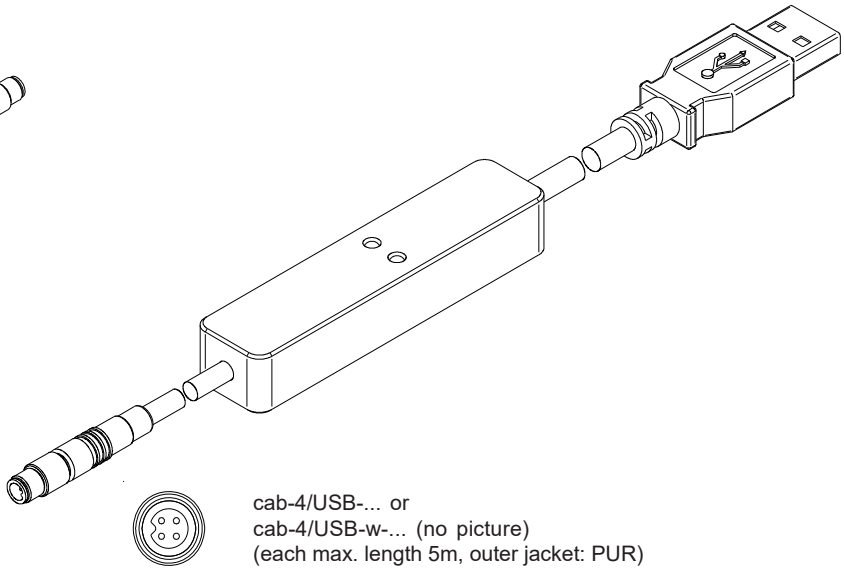

cab-4/USB-... or
cab-4/USB-w-... (no picture)
(each max. length 5m, outer jacket: PUR)

Connecting Cable

Connection
SPECTRO-3-SLU-SA-ANA to SI-SLU-DIF-16:

Connecting cable:
cab-slu4/768-2m
(standard length 2m)

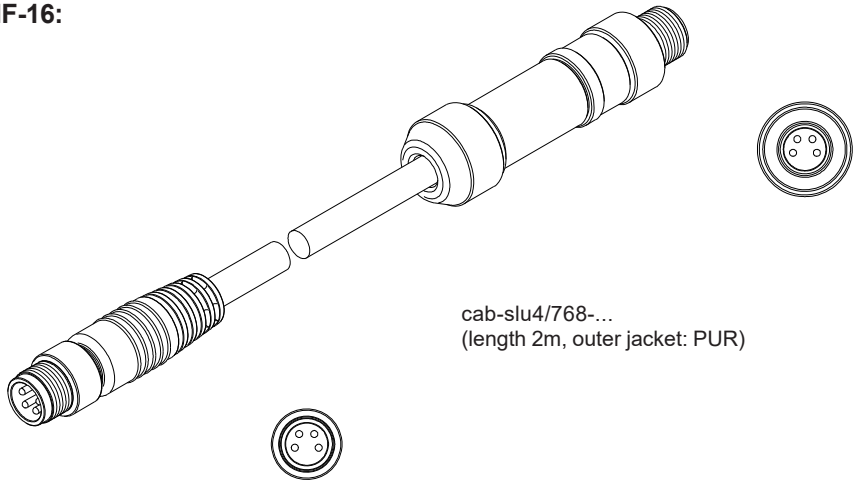

cab-slu4/768-...
(length 2m, outer jacket: PUR)

Measuring Principle

Measuring principle of color sensors of SPECTRO-3-ANA series:

The SPECTRO-3-ANA color sensor provides highly flexible signal acquisition. For example, the sensor can be operated in alternating-light mode (AC mode), which makes the sensor insensitive to extraneous light. It also can be set to constant-light mode (DC mode), which makes the sensor extremely fast. An OFF function turns off the integrated light source at the sensor and changes to DC operation. The sensor then can detect so-called "self-luminous objects". With the stepless adjustment of the integrated light source as well as the selectable gain of the receiver signal and an INTEGRAL function the sensor can be set to almost any surface or any "self-luminous object".

When the integrated light source of the SPECTRO-3-ANA color sensor is activated, the sensor detects the radiation that is diffusely reflected from the object. As a light source the SPECTRO-3 color sensor uses a LED with adjustable transmitter power. An integrated 3-fold receiver for the red, green, and blue content of the light that is reflected from the object, or the light that is emitted by a "self-luminous object", is used as a receiver.

The color sensors of the SPECTRO-3-ANA series can be taught up to 3 colors that are provided directly at the outputs, and up to 64 colors that are output by means of grouping. For each of these taught colors it is possible to set tolerances. In "X Y INT - 2D" or "s i M - 2D" mode these tolerances form a color cylinder in space. In "X Y INT - 3D" or "s i M - 3D" mode the tolerances form a color sphere in space. Color evaluation according to "s i M - 2D" is based on the lab calculation method. All modes can be used in combination with several operating modes such as "FIRST HIT" and "BEST HIT". Raw data are represented with 12 bit resolution.

As a special feature the sensor can be taught two completely independent parameter sets. Input IN0 can then be used to tell the sensor which parameter set it should work with. Color detection either operates continuously or is started through an external PLC trigger signal. The respective detected color either is provided as a binary code at the 2 digital outputs or can be sent directly to the outputs, if only up to 2 colors are to be detected.

In addition to the 2 digital outputs there also are 3 analog outputs that either provide the red, green, and blue components or the calculated color coordinates (X, Y, INT or s, i, M) in values of 0...+10V or 4...20mA.

Through input IN0 (green wire of the cab-las8/SPS cable) the color sensor can be taught up to 3 colors (max. 64 colors in group mode). For this purpose the corresponding evaluation mode must be set with the software.

Parameters and measurement values can be exchanged between a PC and the SPECTRO-3 color sensor through the serial RS232 interface. All the parameters for color detection also can be saved to the non-volatile EEPROM of the SPECTRO-3-ANA color sensor through this serial RS232 interface. When parameterisation is finished, the color sensor continues to operate with the current parameters in STAND-ALONE mode without a PC.

Possible firmware updates can be easily performed through the RS232 interface, even with the sensor system in installed condition.

The sensors of the SPECTRO-3-ANA series can be calibrated (white-light balancing). Balancing can be performed to any white surface. A ColorCheckerTM table with 24 color fields is available as an alternative. White-light balancing or calibration can be performed to one of the white fields.

As a light source the SPECTRO-3-ANA-UV color sensor uses a UV-LED (365 nm or 375 nm) with adjustable transmitter power to excite the luminescent marking. These UV sensors can be optimally adjusted to almost any luminescent colorant that can be excited in the long-wave UV range (365 nm or 375 nm).
The UV sensors of the SPECTRO-3-ANA series also can be calibrated. Analogous to white-light balancing with color sensors, balancing of the SPECTRO-3-ANA-UV sensors could be performed to any luminescent color marking.

Parameterization

Windows® user interface:

(The current software version is available for download on our website.)

The color sensor is parameterized under Windows® with the SPECTRO3-ANA-Scope software. The Windows® user interface facilitates the teach-in process at the color sensor and supports the operator in the task of adjustment and commissioning of the color sensor.



Under Windows® representation of the color value on a PC in numeric form and in a color chart, and representation of RGB values in a time chart. In addition the current RGB values are displayed as a bar chart.

The RS232 interface (tab PARA1 or PARA2) is used for setting parameters such as:

- POWER MODE: Light power of the LED
- LED MODE: Triggering of the internal light source
- GAIN: Used for setting the gain of the receiver
- AVERAGE: Averaging over a maximum of 32768 values. This function field is used for adjusting the number of scanning values (measurement values) over which the raw signal measured at the receiver is averaged. A higher AVERAGE default value reduces noise of the raw signals at the receiver unit and there will be a decrease of the maximal available switching frequency of the sensor
- INTEGRAL: This function field is used to set the number of scan values (measurement values) over which the raw signal measured at the receiver is summed up. This integral function allows the reliable detection even of extremely weak signals
- ANA LOG OUTMODE: Function to determine the signals that the sensor provides at its analog outputs (OUT2, OUT3, OUT4) (R G B, X Y INT, s i M, RGB MM, or siM REF)
- DIGITAL OUTMODE: Control of the 2 digital outputs (OUT0, OUT1)
- MAXCOL-No.: Number of colors to be checked
- INTLIM: Minimum intensity required for color evaluation
- EVALUATION MODE: Various evaluation modes to choose from (FIRST HIT, BEST HIT, MIN DIST, COL2, THD Red Green, THD Red Blu, or THD Green Blue)
- CALCULATION MODE: There are 2 methods of teaching a color: "X Y INT - 3D" (or "s i M - 3D") uses a color sphere in space with radius TOL. Contrary to this, "X Y INT - 2D" (or "s i M - 2D") uses a color cylinder in space with radius CTO or siTO and with height ITO or M.
- EXTEACH: In all the evaluation modes teaching of a color can be performed externally through IN0.
- TRIGGER: Continuous or external or self trigger.

Firmware Update

Firmware update by means of the software „FirmwareLoader“:

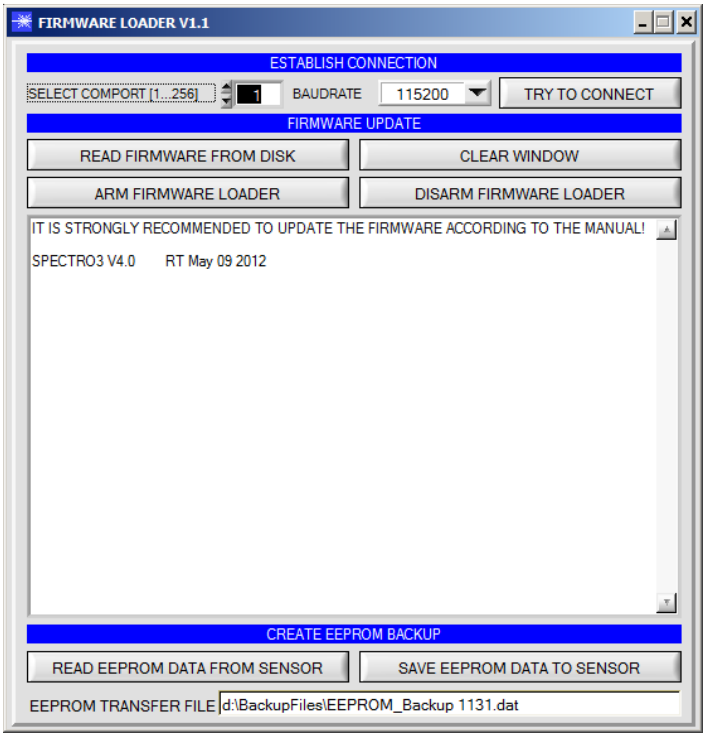

The software „Firmware Loader“ allows the user to perform an automatic firmware update. The update will be carried out through the RS232 interface.

An initialisation file (xxx.ini) and a firmware file (xxx.elf.S) are required for performing a firmware update. These files can be obtained from your supplier. In some cases an additional firmware file for the program memory (xxx.elf.p.S) is also needed, and this file will be automatically provided together with the other two files.

Mounting Accessories

MOUNT-SLU-10°/10°-210
Mounting bracket for fixation of
SPECTRO-3-SLU-SA-ANA (electronic control unit/receiver) and
SI-SLU-DIF-16 (side light unit/transmitter)

Enables reflected light operation in an angle of 20° (2x 10°)
at a reference distance of 210 mm

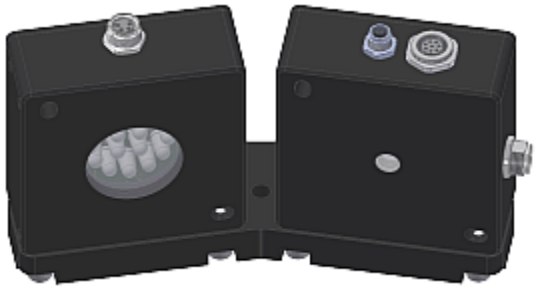

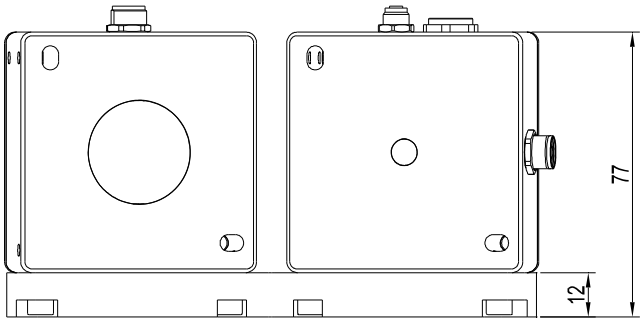

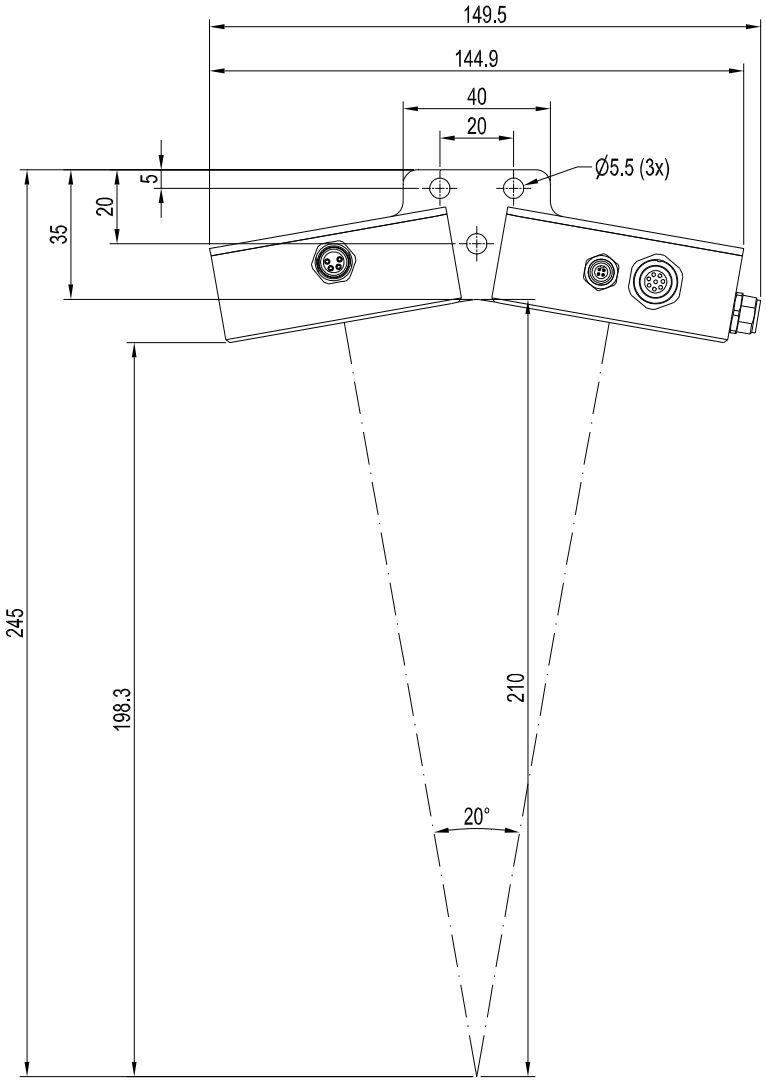

All dimensions in mm

Mounting Accessories

MOUNT-SLU-20°/20°-100
Mounting bracket for fixation of
SPECTRO-3-SLU-SA-ANA (electronic control unit/receiver) and
SI-SLU-DIF-16 (side light unit/transmitter)

Enables reflected light operation in an angle of 40° (2x 20°)
at a reference distance of 100 mm

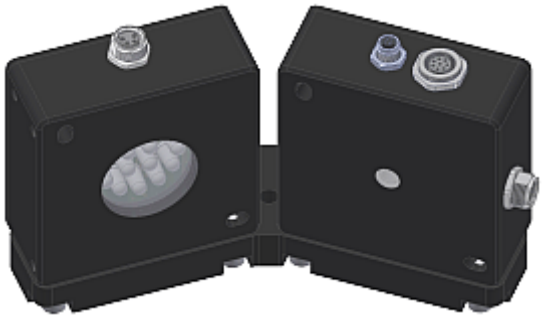

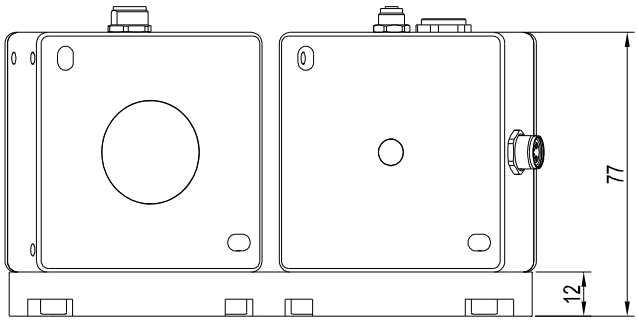

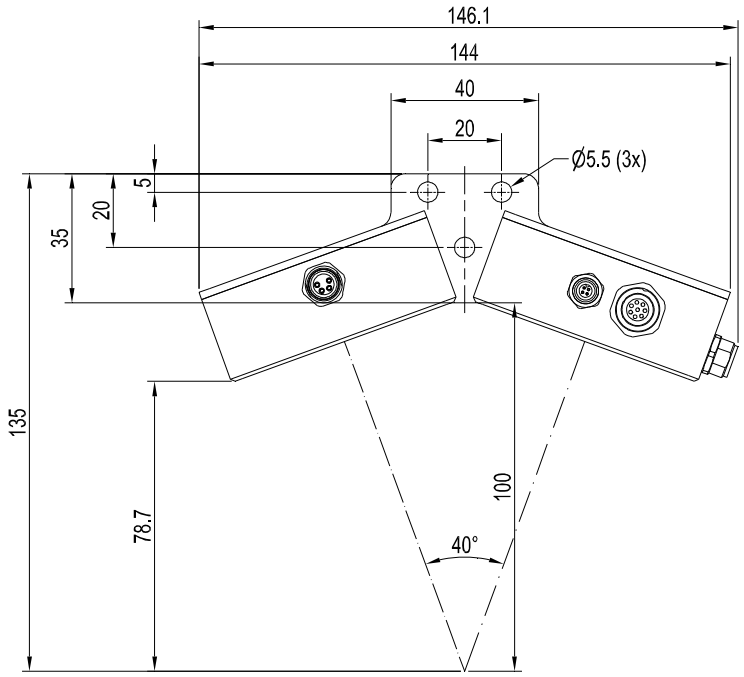

All dimensions in mm

Mounting Accessories

MOUNT-SLU-45°/45°-55
Mounting bracket for fixation of
SPECTRO-3-SLU-SA-ANA (electronic control unit/receiver) and
SI-SLU-DIF-16 (side light unit/transmitter)

Reflexlichtbetrieb in einem Winkel von 90° (2x 45°)
at a reference distance of 55 mm

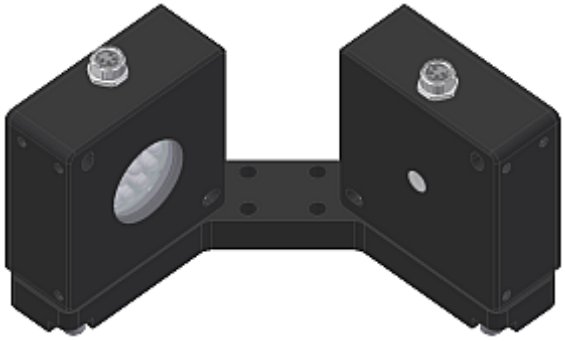

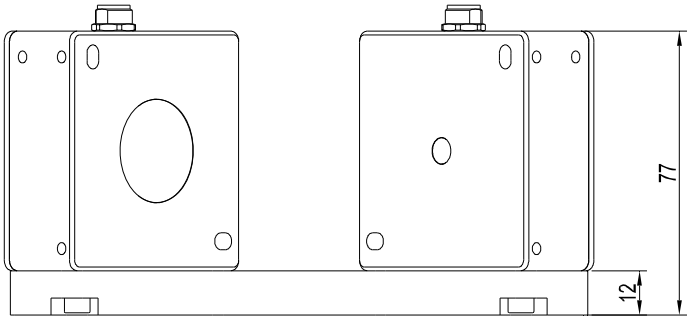

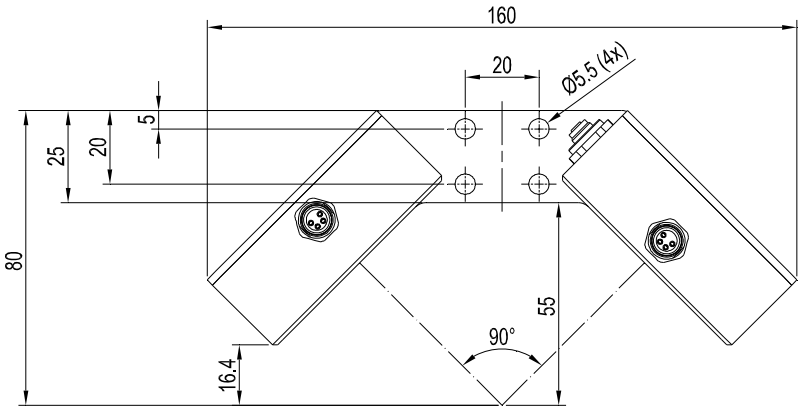

All dimensions in mm

Mounting Accessories

MOUNT-SLU-60°/60°-55
Mounting bracket for fixation of
SPECTRO-3-SLU-SA-ANA (electronic control unit/receiver) and
SI-SLU-DIF-16 (side light unit/transmitter)

Enables reflected light operation in an angle of 120° (2x 60°)
at a reference distance of 55 mm



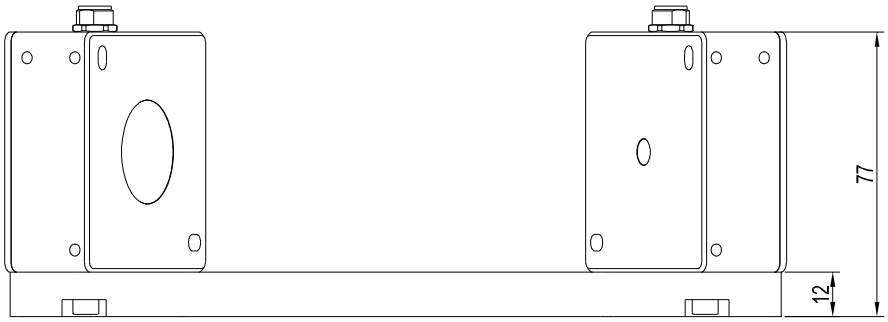

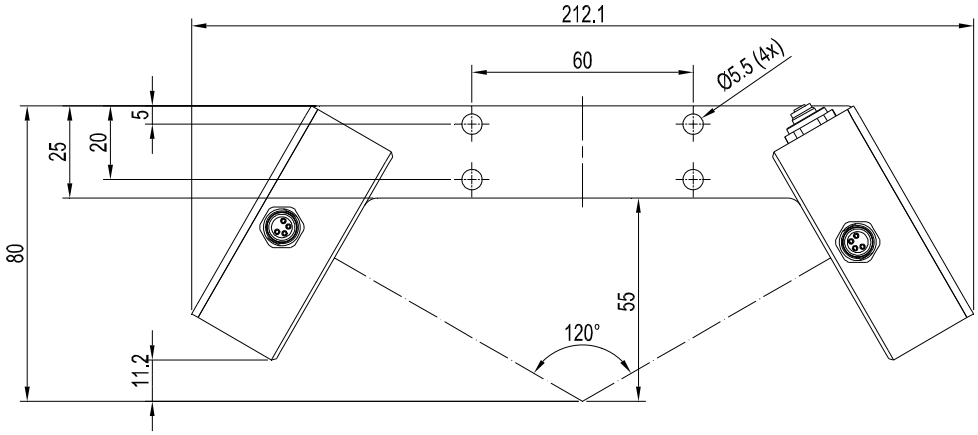

All dimensions in mm

Mounting Accessories

MOUNT-SLU-80/200
Mounting bracket for fixation of
SPECTRO-3-SLU-SA-ANA (electronic control unit/receiver) and
SI-SLU-DIF-16 (side light unit/transmitter)

Enables transmitted light operation at a distance of 80 mm
with sensor units fixed at the end of the fork legs
with an inner length of 200 mm

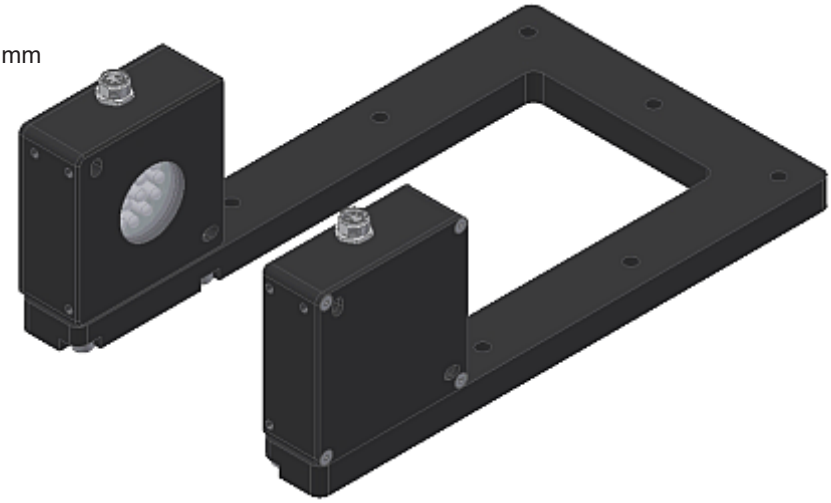

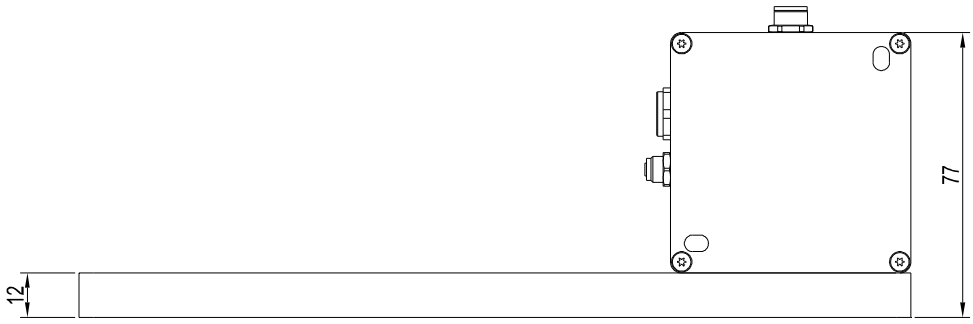

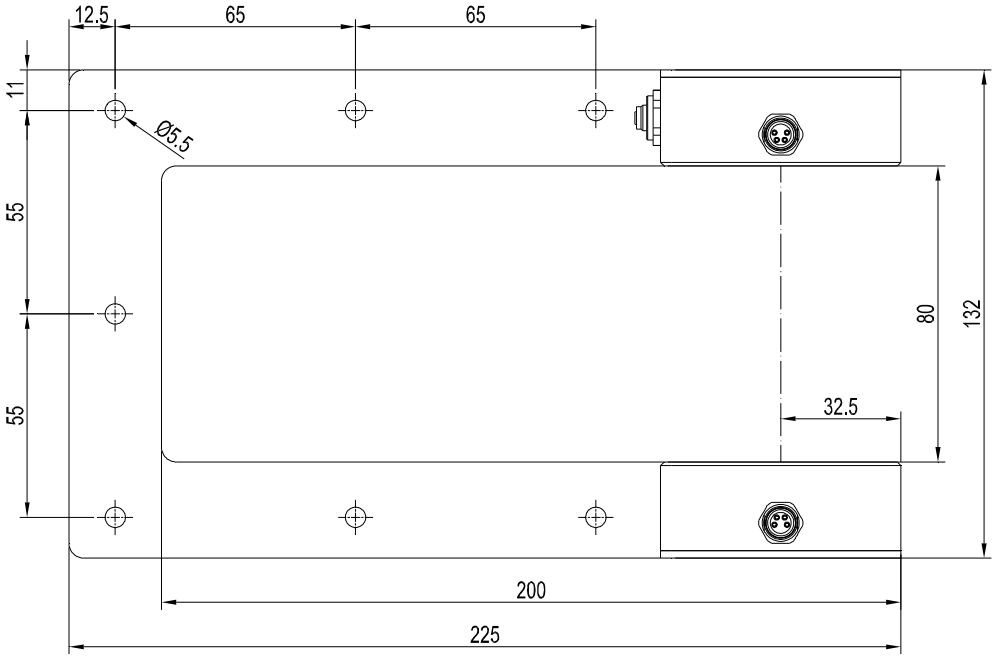

All dimensions in mm

Mounting Accessories

MOUNT-SLU-80/500
Mounting bracket for fixation of
SPECTRO-3-SLU-SA-ANA (electronic control unit/receiver) and
SI-SLU-DIF-16 (side light unit/transmitter)

Enables transmitted light operation at a distance of 80 mm
with sensor units fixed at the end of the fork legs
with an inner length of 500 mm

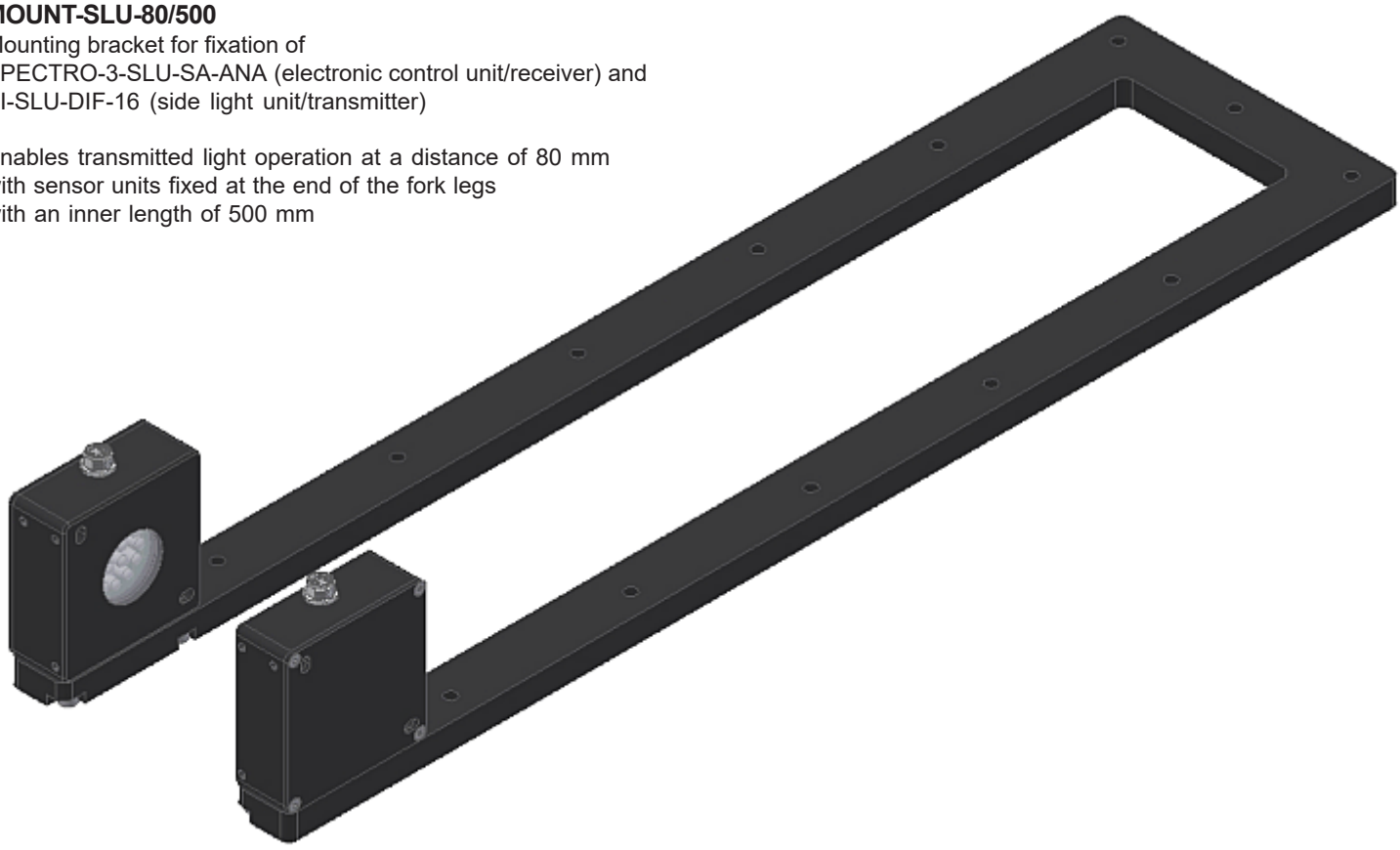

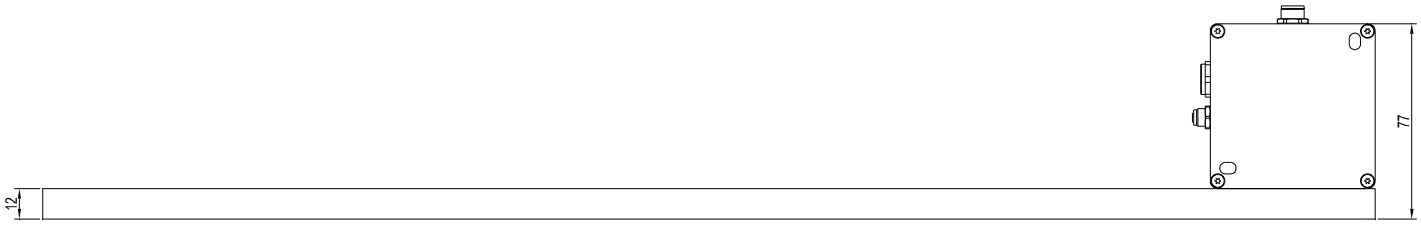

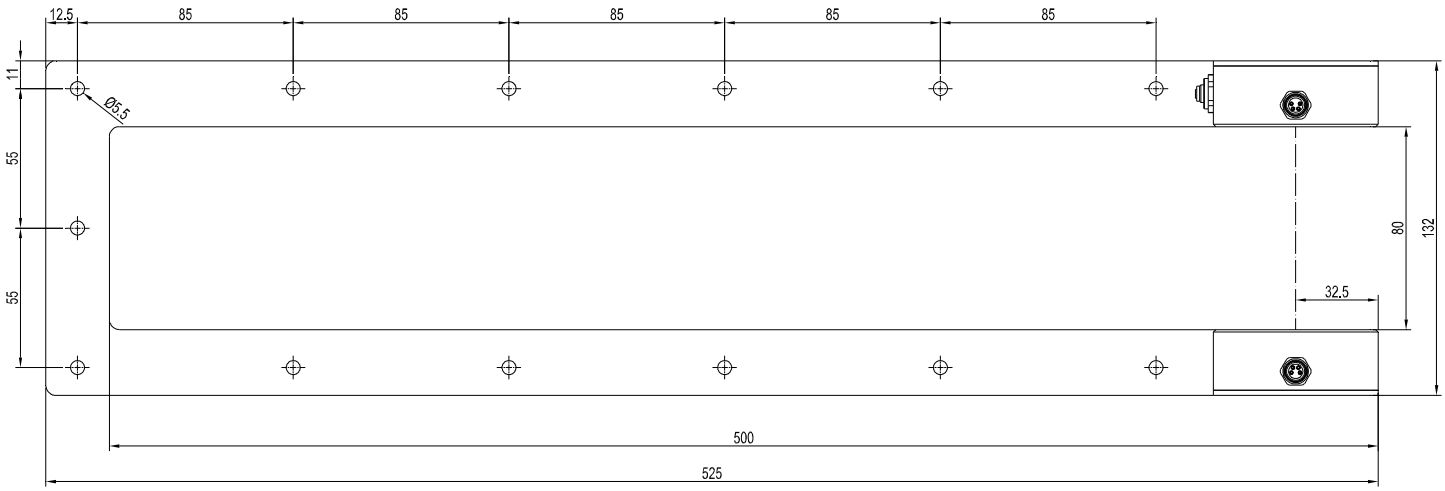

All dimensions in mm