SPECTRO Series

SPECTRO-3-FIO-MSM-ANA-DL

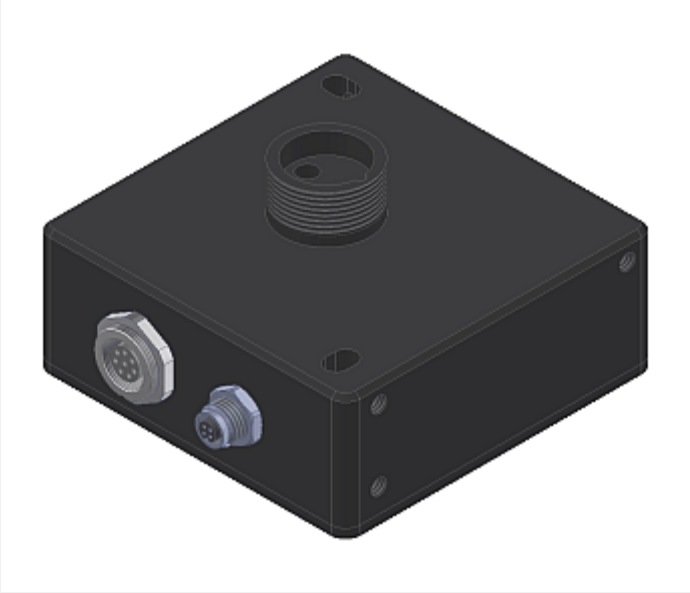

- **Color measurement** (color, contrast, and gray scale detection)
- Various transmitted-light fiber optics and optical frontends available
- Object distance (measuring range) typ. 10 mm ... 500 mm (depends on fiber optics and optical frontend used)
- L*a*b* , L*C*h* , L*u*v*, L*u'v' and xyY evaluation (CIE standard)
- Up to 3 colors can be stored
- D65-similar LED light source (AC- or DC-operation can be switched)
- Insensitive to outside light (in AC-operation)
- Scan frequency max. 90 kHz (in DC-operation)
- Switching frequency typ. 60 kHz
- 3 analog outputs to output color values to PLC
- 2 digital outputs to output taught colors
- TEACH via PC or PLC (external input)
- Various evaluation algorithms can be activated
- "BEST HIT" mode ("human color assessment")
- Averaging can be activated (from 1 up to over 32000 values)
- Parameterizable via Windows® software, scope function
- RS232 interface (USB or Ethernet converter available)
- Temperature compensated
- Color measurement of luminous objects (LEDs, halogen lamps, displays, ...)
- 3-color filter detector (true color detector: "human color perception")
- Transmitted light evaluation

Design

Product name:

SPECTRO-3-FIO-MSM-ANA-DL
(incl. Windows® software SPECTRO3-MSM-ANA-Scope)

Suitable transmitted-light fiber optics:
(please order separately)

D-S-A2.0-(2.5)-1200-67°
D-S-A2.0-(2.5)-3000-67°
D-S-A3.0-(3.0)-1200-67°
D-S-A3.0-(3.0)-3000-67°

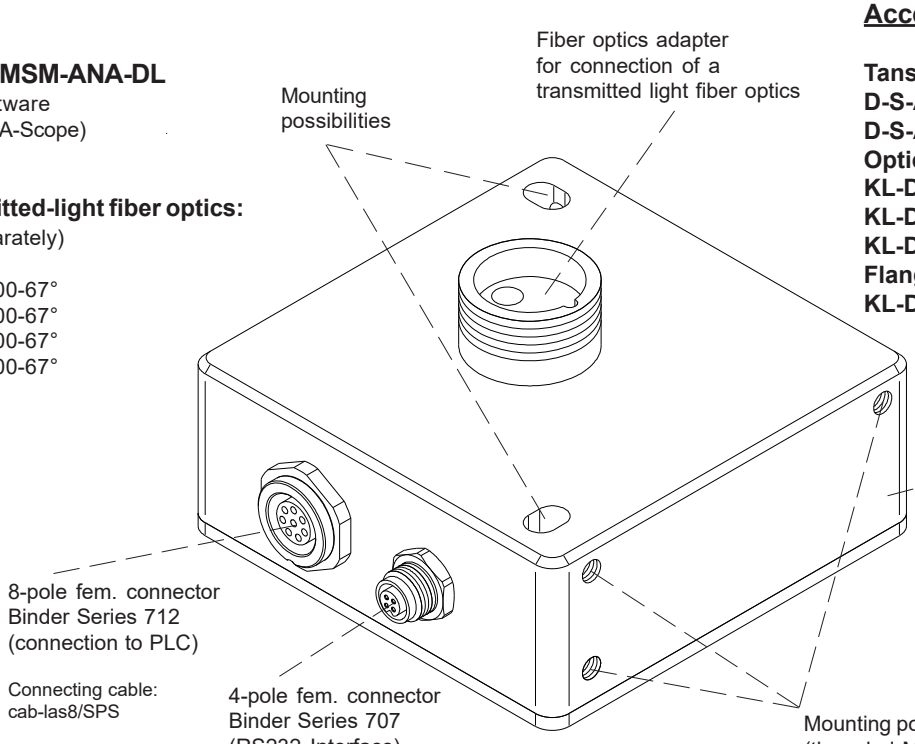

Accessories: (p. 8-16)

Tansmitted-light fiber optics (p. 8-9)
D-S-A2.0-(2.5)-(length)**-67°**
D-S-A3.0-(3.0)-(length)**-67°**
Optical frontends (p. 10-14)
KL-D-45°-26-...
KL-D-0°/45°-85-(length)**-D-S-...-VIS**
KL-D-45°/0°-85-(length)**-D-S-...-VIS**
Flange attachment plate (p. 15-16)
KL-D-45°/0°-22-d80/d110-A3.0



Technical Data

Type	SPECTRO-3-FIO-MSM-ANA-DL
Voltage supply	+24VDC (± 10%), reverse polarity protected, overcurrent protected
Current consumption	< 160 mA
Max. switching current	100 mA, short circuit proof
Input digital (1x)	IN0 (Pin 3), digital (0V/+24V)
Outputs digital (2x)	OUT0, OUT1 (Pin 4 and 5): digital (0V/+24V), npn-/pnp-able (bright-/dark-switching, can be switched)
Outputs analog (3x)	OUT2, OUT3, OUT4 (Pin 6, 7, and 8): 0...+10V or 4...20mA (xyY, a*b*L*; u*v*L*, u'v'L*, C*h*L*, XYZ)
Interface	RS232 (an external USB and ETHERNET converter is available)
Pulse lengthening	0 ... 100 ms, adjustable via PC software
Averaging	max. 32768 values, adjustable via PC software
Scan frequency	LED operation, can be switched via PC software: AC operation: max. 25 kHz (depends on parameterization) DC operation: max. 90 kHz (depends on parameterization)
Switching frequency	typ. 60 kHz
Analog band width	max. 90 kHz (-3dB)
Transmitter (light source)	LED with spectral characteristics similar to D65
Transmitter control	can be switched via PC software: AC operation (LED MODE-AC), DC operation (LED MODE-DC)
Object distance (measuring range)	in transmitted light operation: typ. 10 mm ... 500 mm (depends on fiber optics and attachment optics)
Receiver	3-color filter detector (TRUE COLOR detector, “human color perception“), color filter curves acc. to CIE 1931
Receiver gain setting	8 steps (AMP1 ... AMP8), adjustable via PC software
Ambient light	max. 5000 Lux
Size of light spot	depends on fiber optics and opticam frontend used
Reproducibility	in the X, Y color range each 1 digit at 12-bit A/D conversion
Temperature drift X,Y	ΔX/ΔT; ΔY/ΔT typ. 0,2 digits/°C (< 0,01% / °C)
Measurement accuracy	typ. ΔE = 0.3
Resolution	ΔE >= 0.01 in case of color space L*u'v': Δu'v' = 0.001
Color space	CIE L*a*b* , CIE L*C*h* , CIE L*u*v*, CIE L*u'v', and CIE xyY
Color memory capacity	non-volatile EEPROM with parameter sets for max. 3 colors
Housing dimensions	LxWxH approx. 65 mm x 65 mm x 36 mm (incl. fiber optics adapter M18x1, without flange connectors)
Housing material	aluminum, anodized in black
Enclosure rating	IP64
Connecting cables	to PLC: cab-las8/SPS or cab-las8/SPS-w to PC/RS232 interface: cab-las4/PC or cab-las4/PC-w to PC/USB interface: cab-4/USB or cab-4/USB-w to PC/Ethernet interface: cab-4/ETH
Type of connector	connection to PLC: 8-pole fem. connector (Binder 712), connection to PC: 4-pole fem. connector (Binder 707)
Operating temp. range	-20°C ... +55°C
Storage temperature range	-20°C ... +85°C
EMC test acc. to	DIN EN 60947-5-2 CE

Dimensions

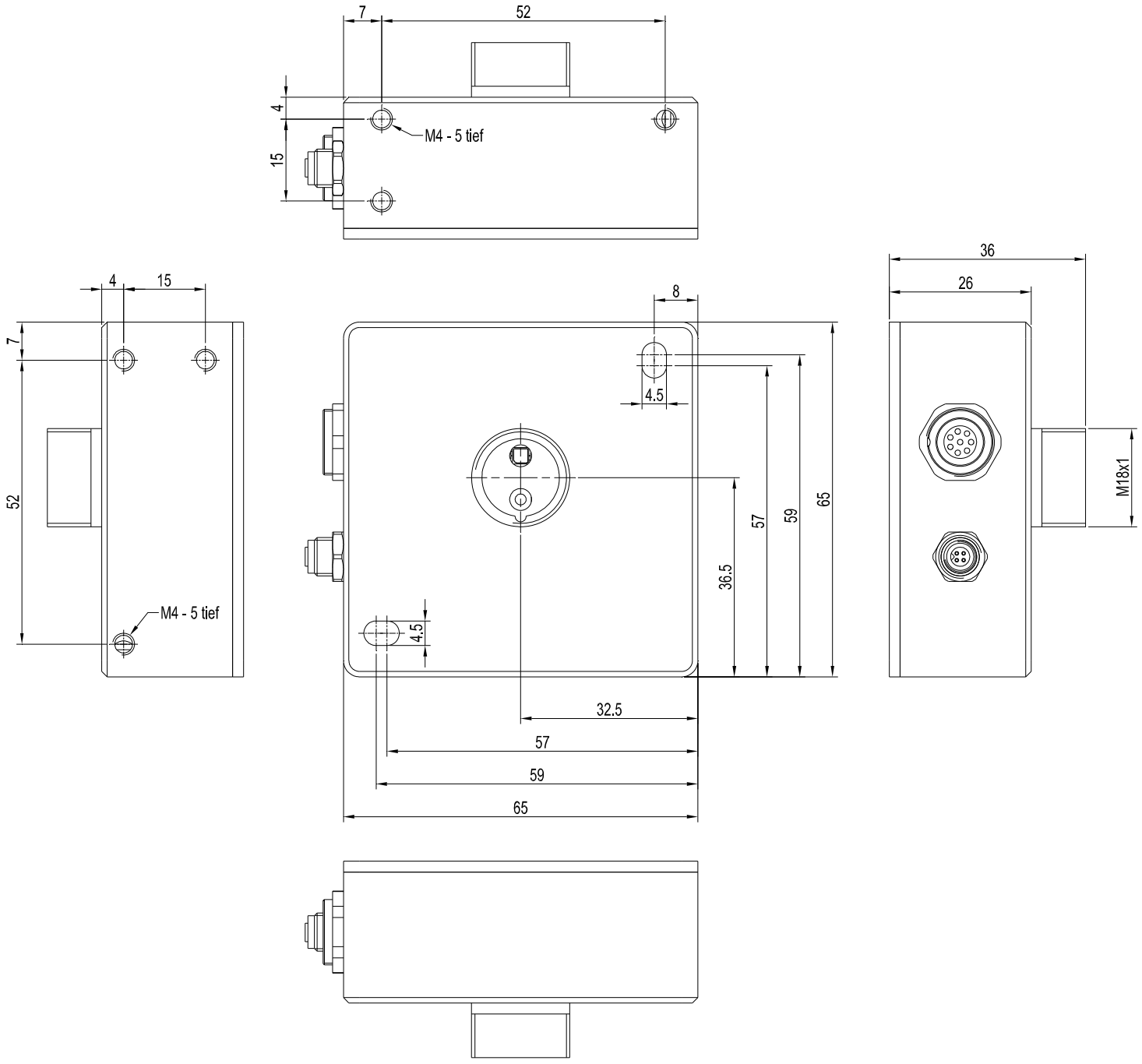

All dimensions in mm

Connector Assignment

Connection to PLC:
8-pole fem. connector Binder series 712

Pin:	Color:	Assignment:
1	white	GND (0V)
2	brown	+24VDC (±10%)
3	green	IN0 (Digital 0: 0 … 1V, Digital 1: +Ub - 10%)
4	yellow	OUT0 (Digital 0: 0 … 1V, Digital 1: +Ub - 10%)
5	grey	OUT1 (Digital 0: 0 … 1V, Digital 1: +Ub - 10%)
6	pink or black	OUT2 X, x, a*, u*, u‘ or C* (Analog: 0 ... +10V or 4 ... 20mA)
7	blue	OUT3 Y, y, b*, v*, v‘ or h* (Analog: 0 ... +10V or 4 ... 20mA)
8	red	OUT4 Z, Y or L* (Analog: 0 ... +10V or 4 ... 20mA)

Connecting cable:
cab-las8/SPS-(length)
cab-las8/SPS-w-(length)
(standard length 2m)

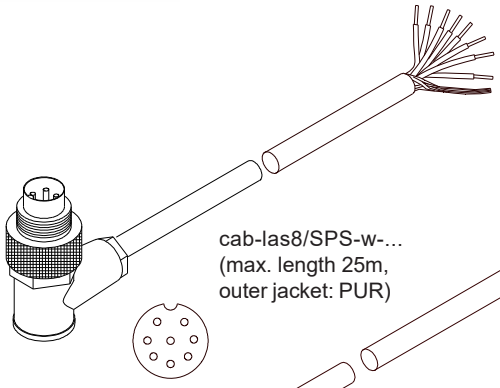

cab-las8/SPS-w-...
(max. length 25m,
outer jacket: PUR)

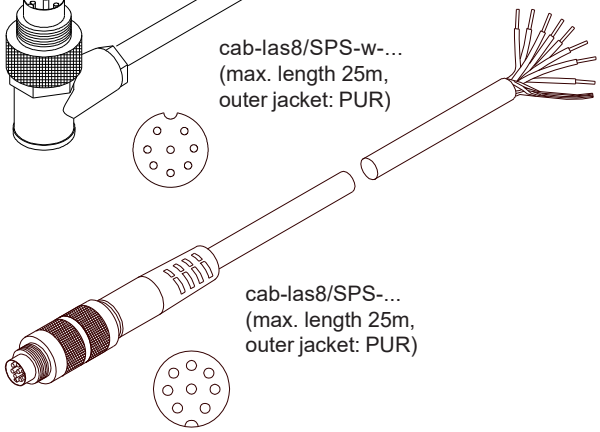

cab-las8/SPS-...
(max. length 25m,
outer jacket: PUR)

Connection to PC:
4-pole fem. connector Binder Series 707

Pin:	Assignment:
1	+24VDC (+Ub, OUT)
2	GND (0V)
3	RxD
4	TxD

Connection via RS232 interface at the PC:
Connecting cable:
cab-las4/PC-(length)
cab-las4/PC-w-(length) (angle type 90°)
(standard length 2m)

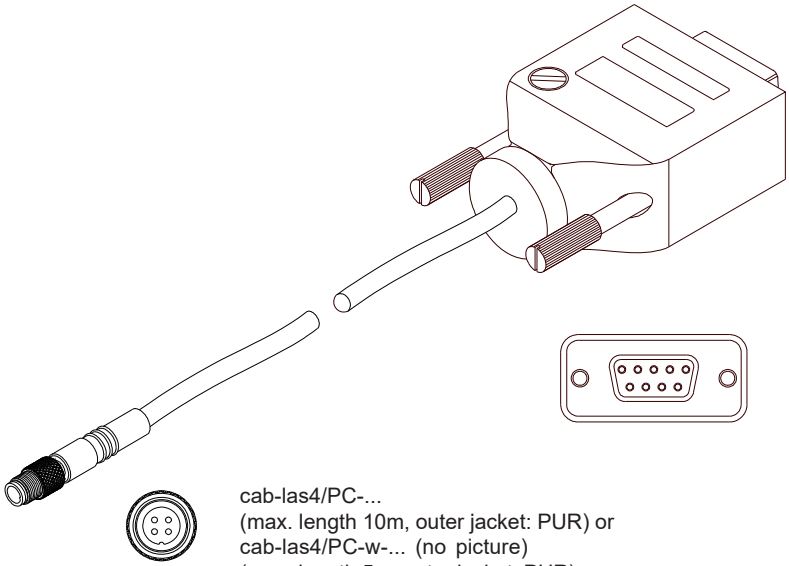

cab-las4/PC-...
(max. length 10m, outer jacket: PUR) or
cab-las4/PC-w-... (no picture)
(max. length 5m, outer jacket: PUR)

alternative:
Connection via USB interface at the PC:
USB converter (incl. driver software):
cab-4/USB-(length)
cab-4/USB-w-(length) (angle type 90°)
(standard length 2m)

alternative:
Connection to local network via Ethernet bus:
Ethernet converter (incl. software „SensorFinder“):
cab-4/ETH-500
(standard length 0.5m)

Optional: External CAT5 cable, e.g.
cab-eth/M12D-RJ45-flx-(length)

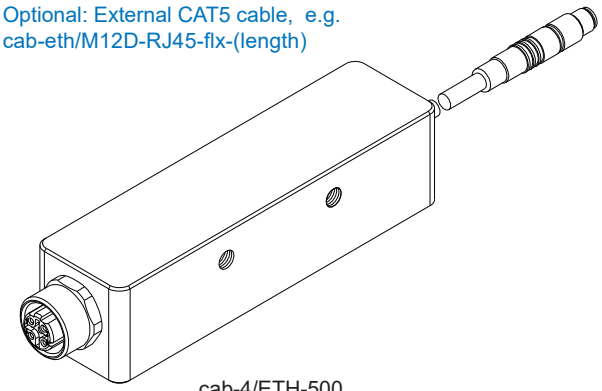

cab-4/ETH-500
(length 0.5m, outer jacket: PUR)
4-pole M12 fem. conn. (D-coded)
for connection of an external
CAT5 cable, e.g.
cab-eth/M12D-RJ45-flx-(length)

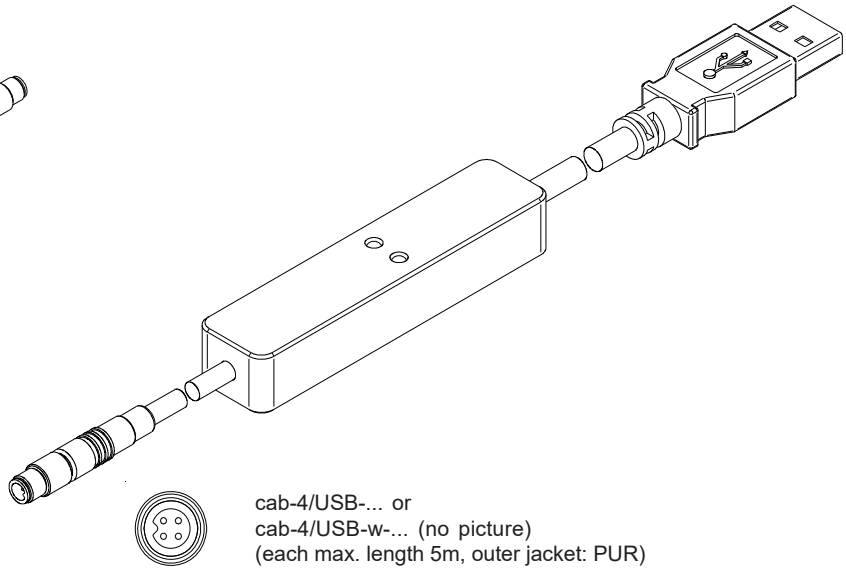

cab-4/USB-... or
cab-4/USB-w-... (no picture)
(each max. length 5m, outer jacket: PUR)

Measuring Principle

Measuring principle of color sensors of SPECTRO-3-...-MSM-ANA Series:

The SPECTRO-3-MSM-ANA color sensor provides highly flexible signal acquisition. For example, the sensor can be operated in alternating-light mode (AC mode), which makes the sensor insensitive to extraneous light. It also can be set to constant-light mode (DC mode), which makes the sensor extremely fast. With the stepless adjustment of the integrated light source as well as the selectable gain of the receiver signal and an INTEGRAL function the sensor can be set to almost any surface or any "self-luminous object".

When the integrated light source of the SPECTRO-3-MSM-ANA color sensor is activated, the sensor detects the radiation that is diffusely reflected from the object. As a light source the SPECTRO-3-MSM-ANA color sensor uses LEDs (in case of color sensor type -VISUV additional UV LEDs) with adjustable transmitter power. An integrated 3-fold receiver for the red, green, and blue content of the light that is reflected from the object, or the light that is emitted by a "self-luminous object", is used as a receiver.

The SPECTRO-3-MSM-ANA color sensor can be "taught" up to 3 colors. For each of these taught colors it is possible to set tolerances. Evaluation of the taught colors is performed either with the "FIRST HIT" or with the "BEST HIT" mode. With "FIRST HIT" the first hit in the teach table is output, and with "BEST HIT" the best hit in the teach table is output. Raw data are represented with 12 bit resolution.

Color detection either operates continuously or is started through an external PLC trigger signal. The respective detected color either is provided as a binary code at the 2 digital outputs or can be sent directly to the outputs, if only up to 2 colors are to be detected.

In addition to the 2 digital outputs there also are 3 analog outputs that either provide the red, green, and blue components or the calculated color coordinates in values of 0…+10V or 4…20mA.

Through input IN0 (green wire of the cab-las8/SPS cable) the color sensor can be taught up to 3 colors. For this purpose the corresponding parameter mode must be set with the software.

Parameters and measurement values can be exchanged between a PC and the SPECTRO-3-MSM-ANA color sensor through the serial RS232 interface. All the parameters for color detection also can be saved to the non-volatile EEPROM of the SPECTRO-3-MSM-ANA color sensor through this serial RS232 interface. When parameterisation is finished, the color sensor continues to operate with the current parameters in STAND-ALONE mode without a PC.

Possible firmware updates can be easily performed through the RS232 interface, even with the sensor system in installed condition. (a firmware update is performed via the software „FirmwareLoader").

The measuring sensors of the SPECTRO-3-MSM-ANA series are factory calibrated. When establishing the connection, the date of the next calibration is displayed in the status window in the CONNECT tab. For continuously accurate measurement results, we recommend having the calibration renewed every 12 months and sending in the sensors for calibration.

Moreover, the sensors of the SPECTRO-3-MSM-ANA series can be individually calibrated. Calibration can be performed to any surface with known color coordinates. A ColorCheckerTM table is available as an alternative. This table has 24 color fields according to the CIE STANDARD that can be used for calibration.

Furthermore, input IN0 can be used for performing white light balancing.

Parameterization

Windows® user interface:

(The current software version is available for download on our website.)

The color sensor is parameterized under Windows® with the SPECTRO3-MSM-ANA-Scope software. The Windows® user interface facilitates the teach-in process at the color sensor and supports the operator in the task of adjustment and commissioning of the color sensor.

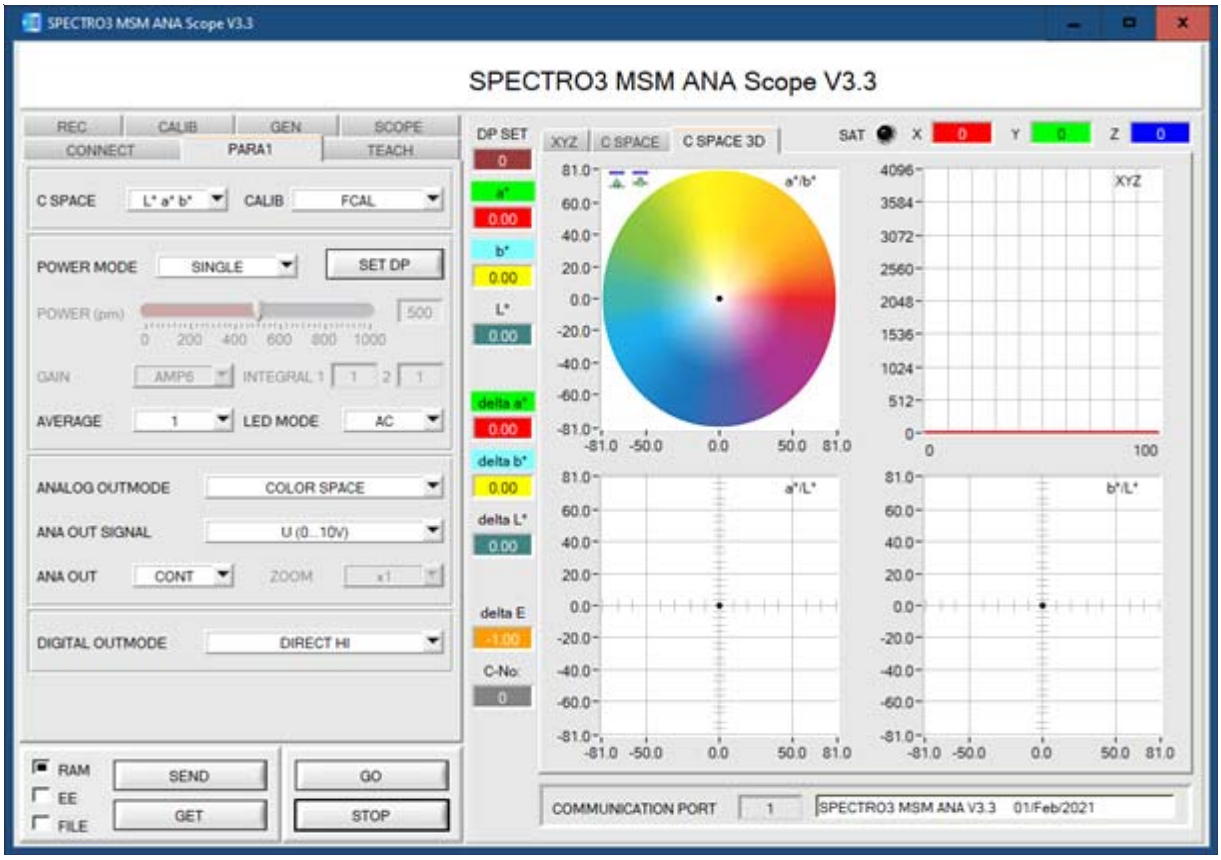

The RS232 interface (tab PARA1) is used for setting parameters such as e.g.:

- POWER MODE (SET DP): Light power of the LED (Set Double Parameter)
- LED MODE: Triggering of the internal light source (AC, DC)
- GAIN: Used for setting the gain of the receiver (AMP1 ... AMP8)
- AVERAGE: Averaging over a maximum of 32768 values. This function field is used for adjusting the number of scanning values (measurement values) over which the raw signal measured at the receiver is averaged. A higher AVERAGE default value reduces noise of the raw signals at the receiver unit and there will be a decrease of the maximal available switching frequency of the sensor
- INTEGRAL: This function field is used to set the number of scan values (measurement values) over which the raw signal measured at the receiver is summed up. This integral function allows the reliable detection even of extremely weak signals
- C SPACE: Selection of a color space ((L*a*b* , L*C*h* , L*u*v*, L*u‘v‘, or xyY) for the calculation of the color stimulus specification
- ANA LOG OUTMODE: Function to determine the signals that the sensor provides at its analog outputs (OUT2, OUT3, OUT4) (OFF, XYZ, COLOR SPACE, CS REF)
- EVALUATION MODE: BEST HIT or FIRST HIT
- TRIGGER: Continuous or external or self trigger (CONT, EXT1, EXT2, TRANS)
- EXTEACH: In all the evaluation modes teaching of a color can be performed externally through IN0.
- INTLIM: Minimum intensity required for color evaluation
- MAXCOL-No.: Number of colors to be checked
- DIGITAL OUTMODE: Control of the two digital outputs (OUT0, OUT1)

Tab TEACH Opens a window where you can teach colors to the TEACH TABLE
Tab CALIB Selection of calibration mode (FCAL = factory calibration or UCAL = user calibration).
Tab SCOPE Visualises an oscilloscope
Tab GEN Displays the current temperature value TEMP in the sensor housing
Tab REC Data recorder

Firmware Update

Windows® software „FirmwareLoader“:

(The current software version is available for download on our website.)

The software „Firmware Loader“ allows the user to perform an automatic firmware update. The update will be carried out through the RS232 interface.

An initialisation file (xxx.ini) and a firmware file (xxx.elf.S) are required for performing a firmware update. These files can be obtained from your supplier. In some cases an additional firmware file for the program memory (xxx.elf.p.S) is also needed, and this file will be automatically provided together with the other two files.

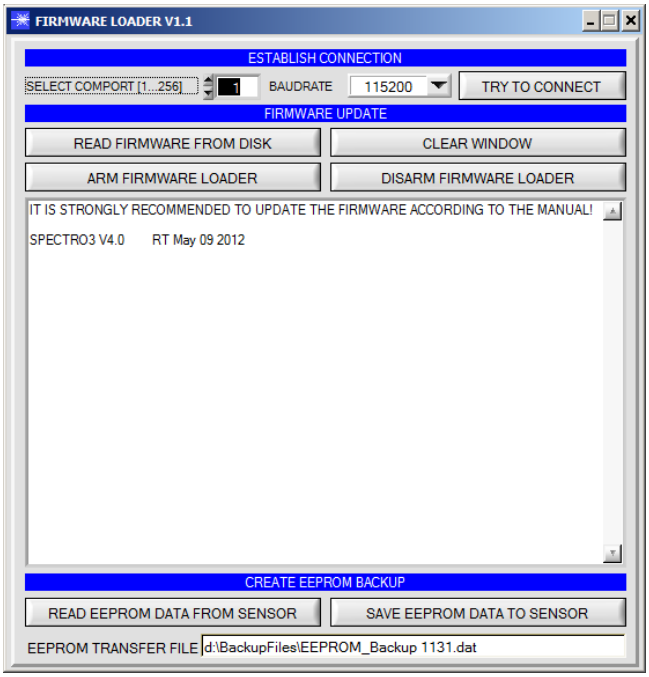

Monitoring Software

Windows® software „SPECTRO3-MSM-ANA-Monitoring“:

(The current software version is available for download on our website.)

The software „SPECTRO3-MSM-ANA-Monitoring“ was developed for configuring up to 8 color sensors of the SPECTRO-3-MSM-ANA series in a multi-sensor system that can be used for the continuous inline measurement and control of surfaces at several measuring points at the same time. Measurement values are recorded and are also displayed at the PC monitor, and they can be printed out after the end of recording.

The software concept provides two user levels: A password-protected administrator function for configuring the inline measurement system and for setting all the parameters for operation, and an easy-to-use user function that only allows the setting of the start and end of recording with input of production parameters (that have been determined by the administrator). The print function also is available for the normal user.

As a support for commissioning and operation of the SPECTRO3-MSM-ANA-MONITORING software this manual explains the individual functional elements of the graphic Windows® user interface.

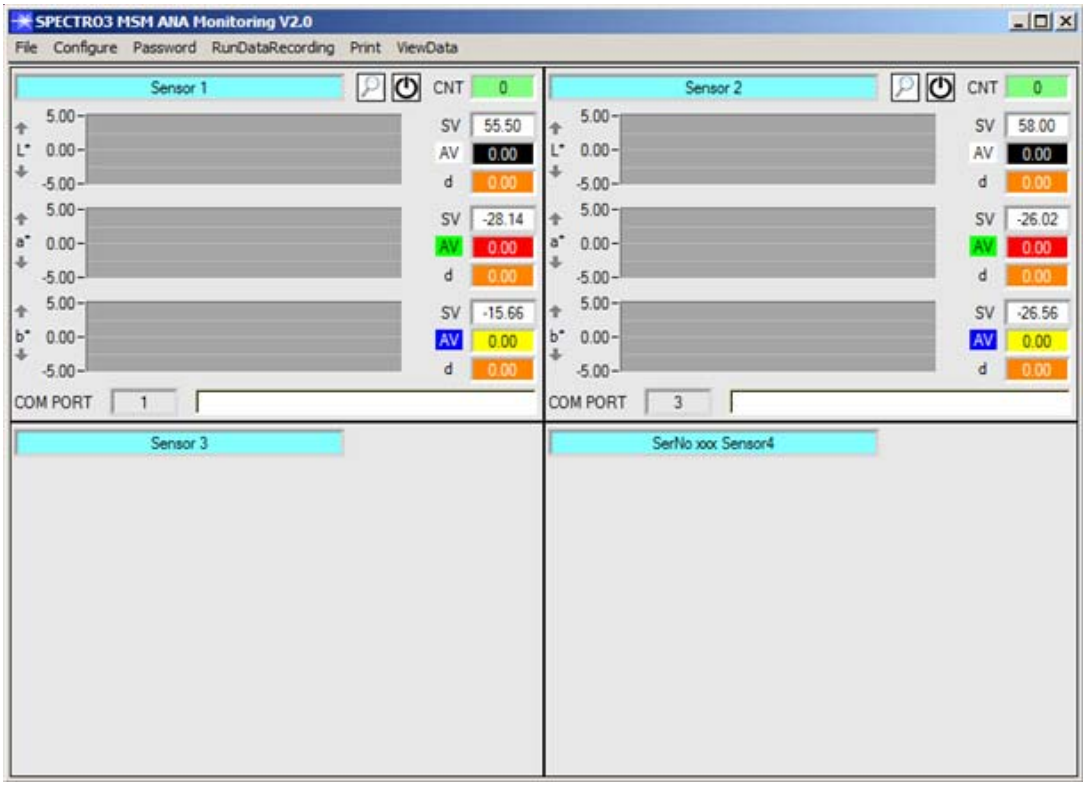

Fiber Optics

D-S-A2.0-(2.5)-1200-67°
Transmitted-light fiber optics

Also available in length 3000mm:
D-S-A2.0-(2.5)-3000-67°

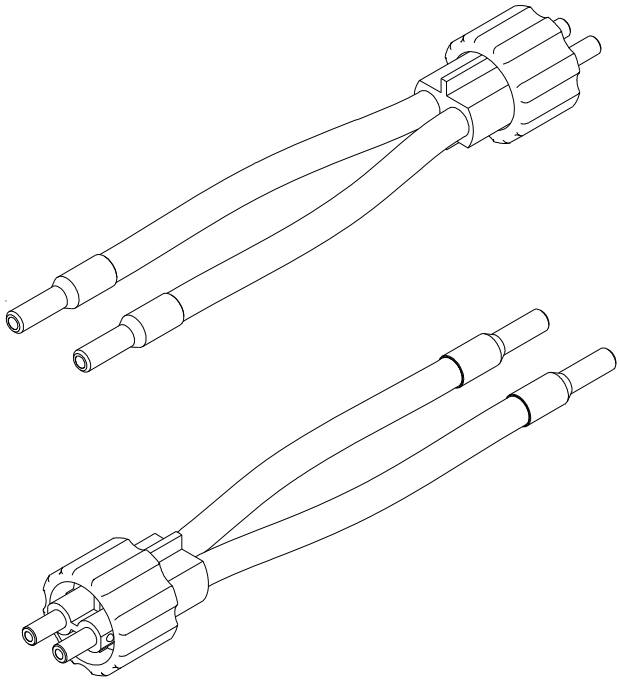

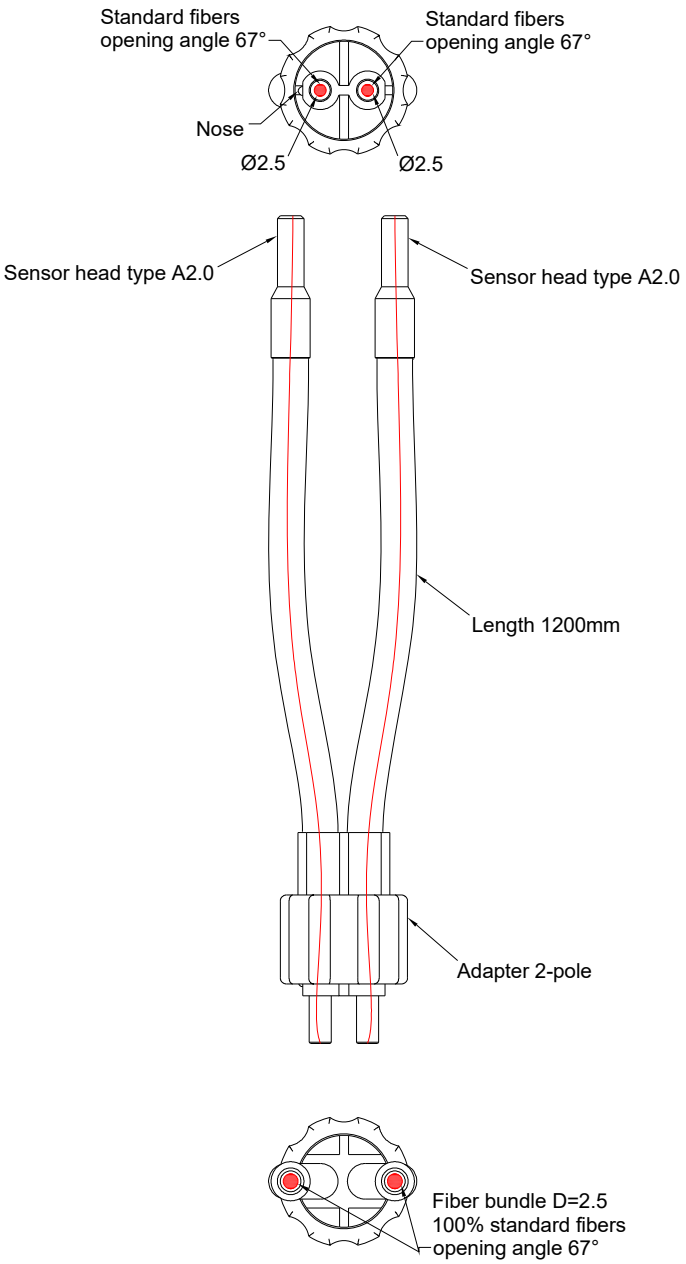

Fiber Optics

D-S-A3.0-(3.0)-1200-67°

Transmitted-light fiber optics

Also available in length 3000mm:

D-S-A3.0-(2.5)-3000-67°

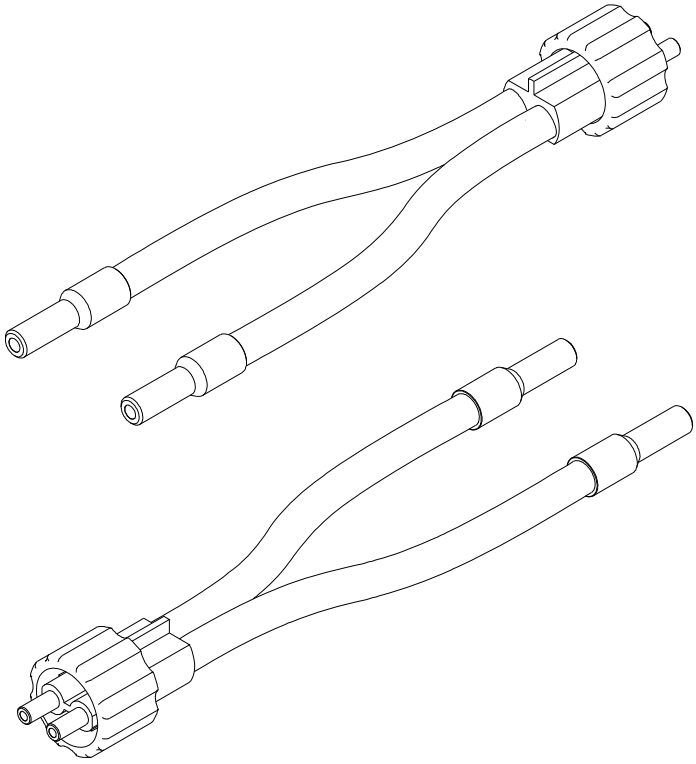

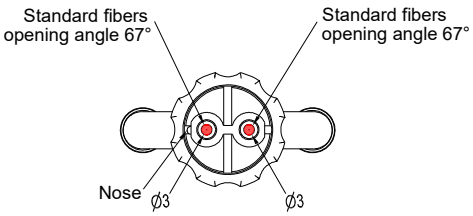

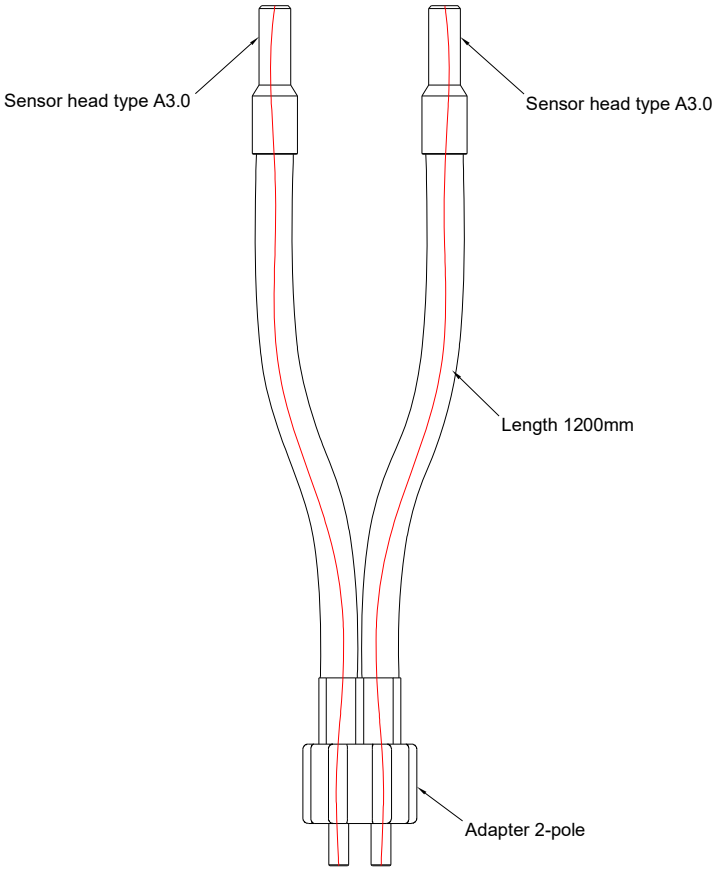

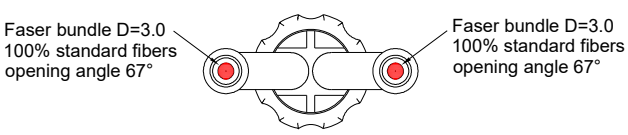

Optical Frontends

Optical frontend for fiber optics with sensor head type A2.0:

KL-D-45°-26-A2.0

Optical frontend, suitable for transmitted-light fiber optics
D-S-A2.0-(2.5)-1200-67°
D-S-A2.0-(2.5)-3000-67°

Transmitted-light fiber optics
D-S-A2.0-(2.5)-1200-67° or
D-S-A2.0-(2.5)-3000-67°

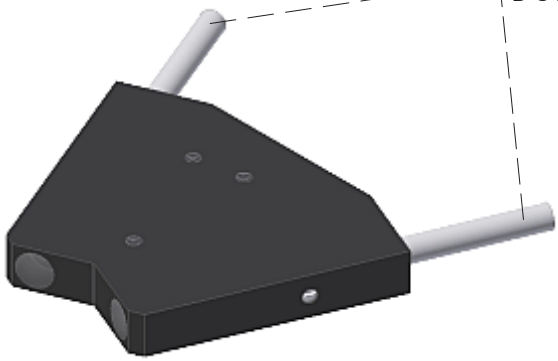

Optical frontend for fiber optics with sensor head type A3.0:

KL-D-45°-26-A3.0

Optical frontend, suitable for transmitted-light fiber optics
D-S-A3.0-(3.0)-1200-67°
D-S-A3.0-(3.0)-3000-67°

Transmitted-light fiber optics
D-S-A3.0-(3.0)-1200-67° or
D-S-A3.0-(3.0)-3000-67°

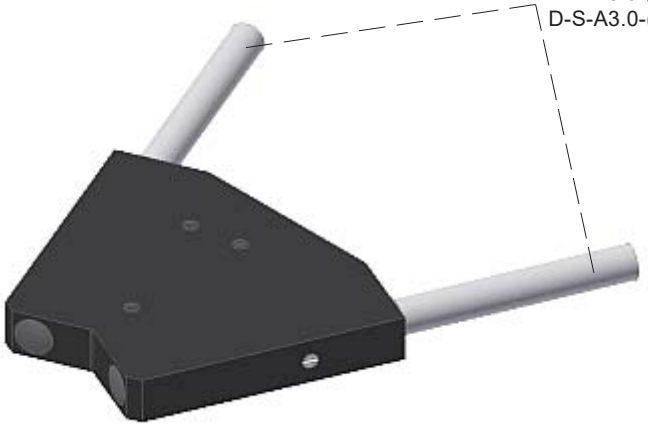

Optical Frontends

Optical frontends with integrated transmitted light fiber optics with sensor head type A2.0

KL-D-0°/45°-85-1200-D-S-A2.0-VIS

Optical frontend with integrated transmitted-light fiber optics D-S-A2.0-(2.5)-1200-67°

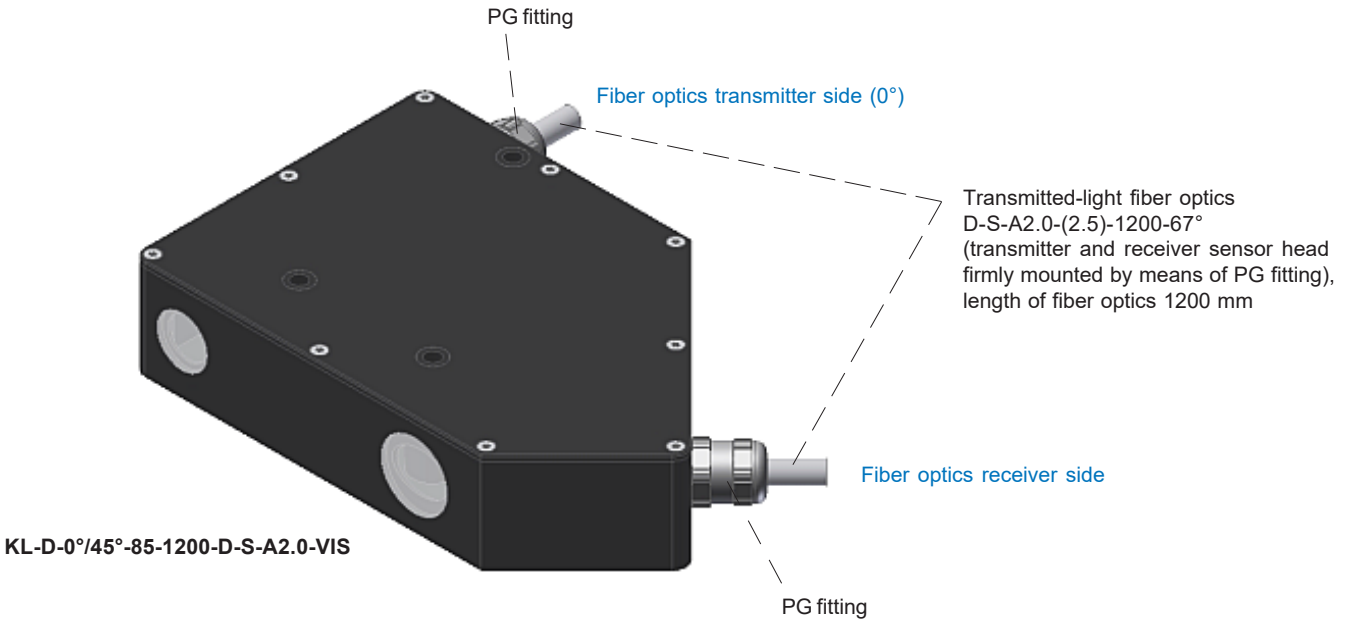

KL-D-0°/45°-85-1200-D-S-A2.0-VIS

KL-D-45°/0°-85-1200-D-S-A2.0-VIS

Optical frontend with integrated transmitted-light fiber optics D-S-A2.0-(2.5)-1200-67°

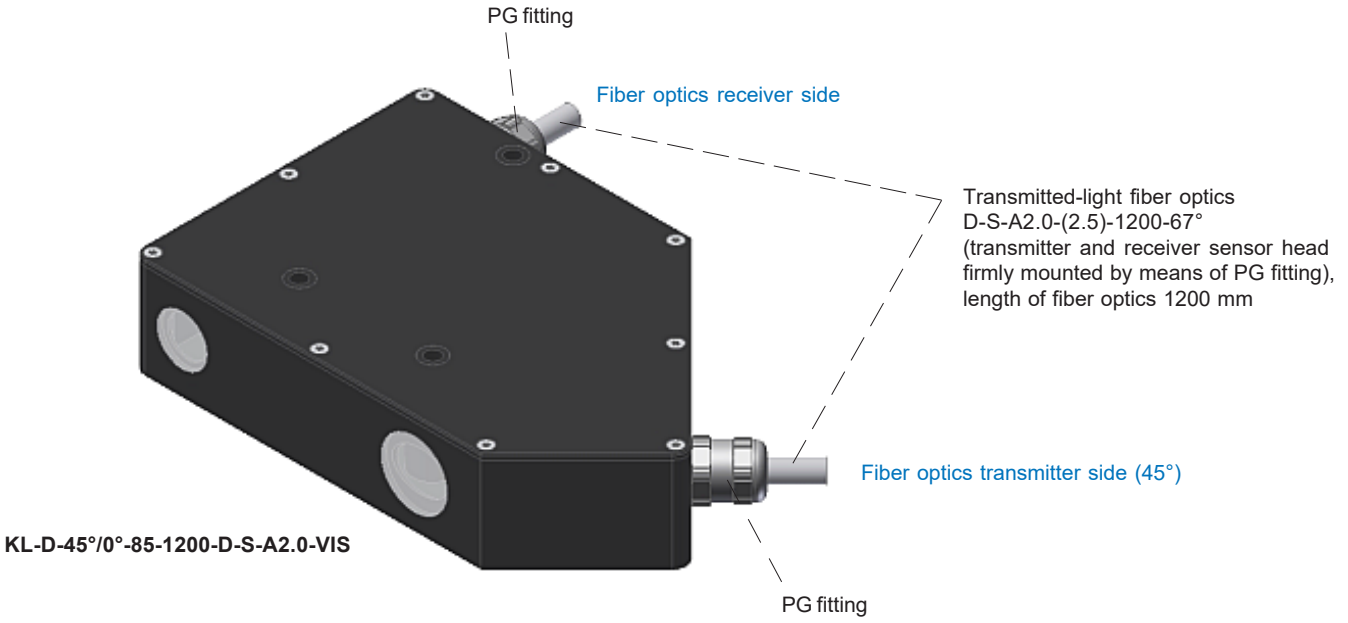

KL-D-45°/0°-85-1200-D-S-A2.0-VIS

Optical Frontends

Optical frontends with integrated transmitted light fiber optics with sensor head type A2.0

KL-D-0°/45°-85-3000-D-S-A2.0-VIS

Optical frontend with integrated transmitted-light fiber optics D-S-A2.0-(2.5)-3000-67°

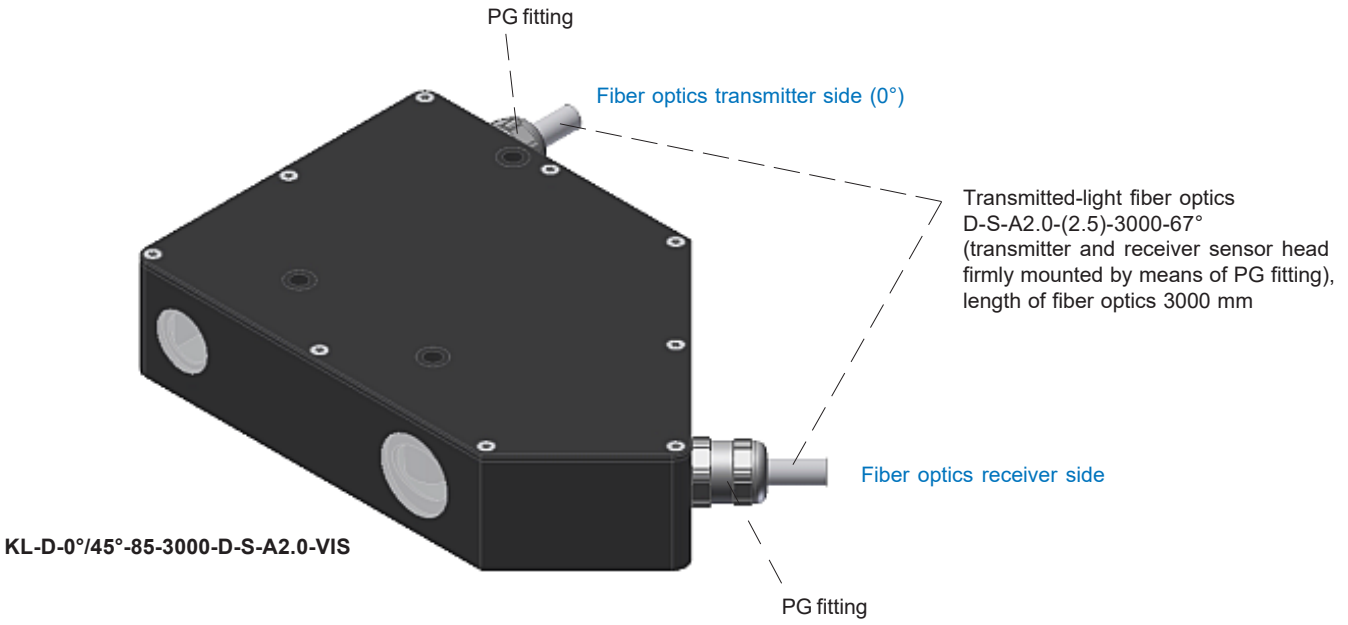

KL-D-45°/0°-85-3000-D-S-A2.0-VIS

Optical frontend with integrated transmitted-light fiber optics D-S-A2.0-(2.5)-3000-67°

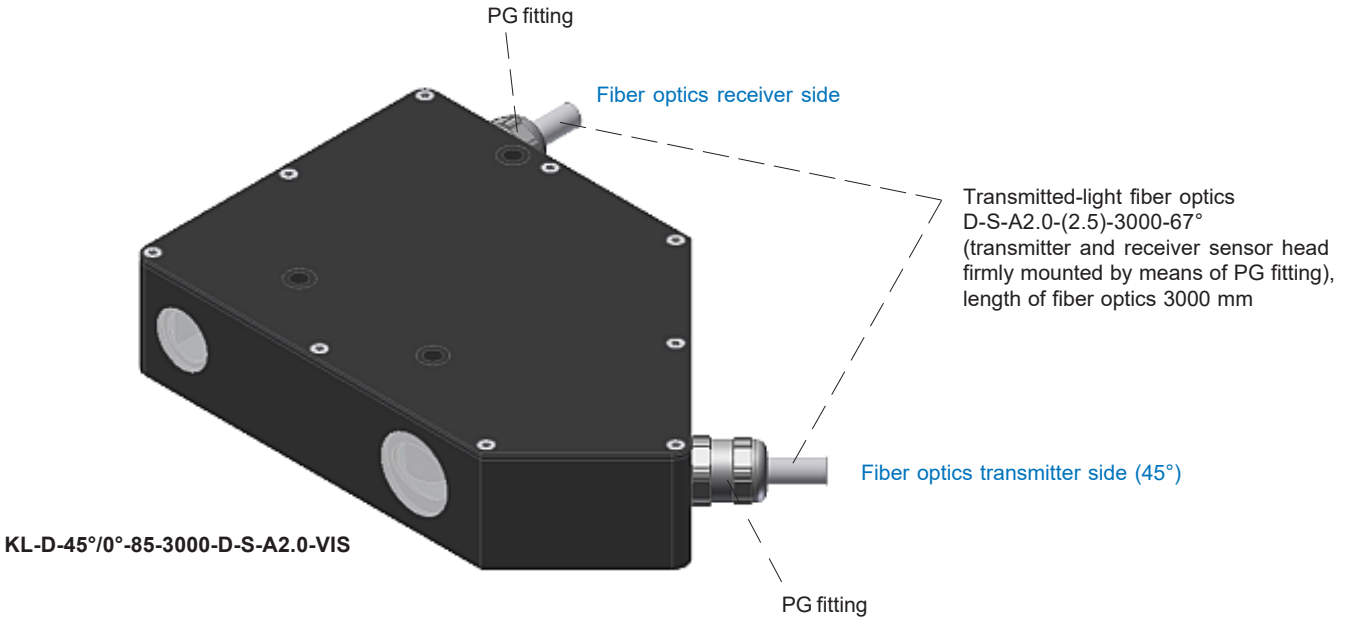

Optical Frontends

Optical frontends with integrated transmitted light fiber optics with sensor head type A3.0

KL-D-0°/45°-85-1200-D-S-A3.0-VIS

Optical frontend with integrated transmitted-light fiber optics D-S-A3.0-(3.0)-1200-67°

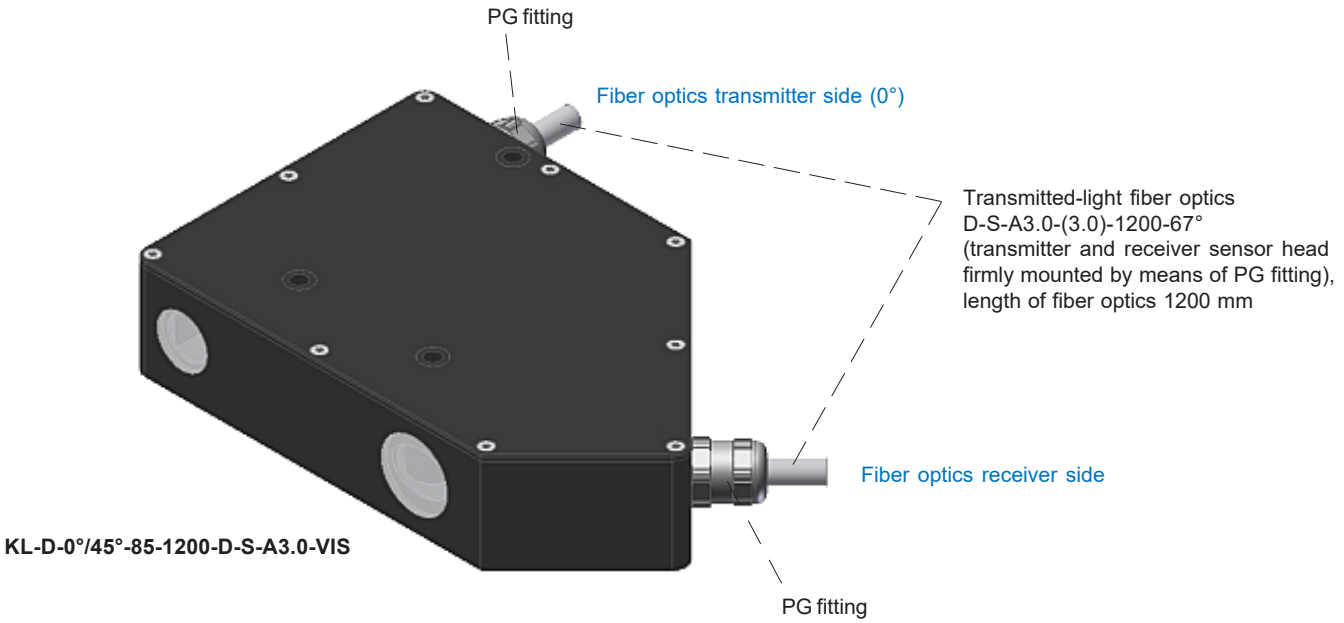

KL-D-0°/45°-85-1200-D-S-A3.0-VIS

KL-D-45°/0°-85-1200-D-S-A3.0-VIS

Optical frontend with integrated transmitted-light fiber optics D-S-A3.0-(3.0)-1200-67°

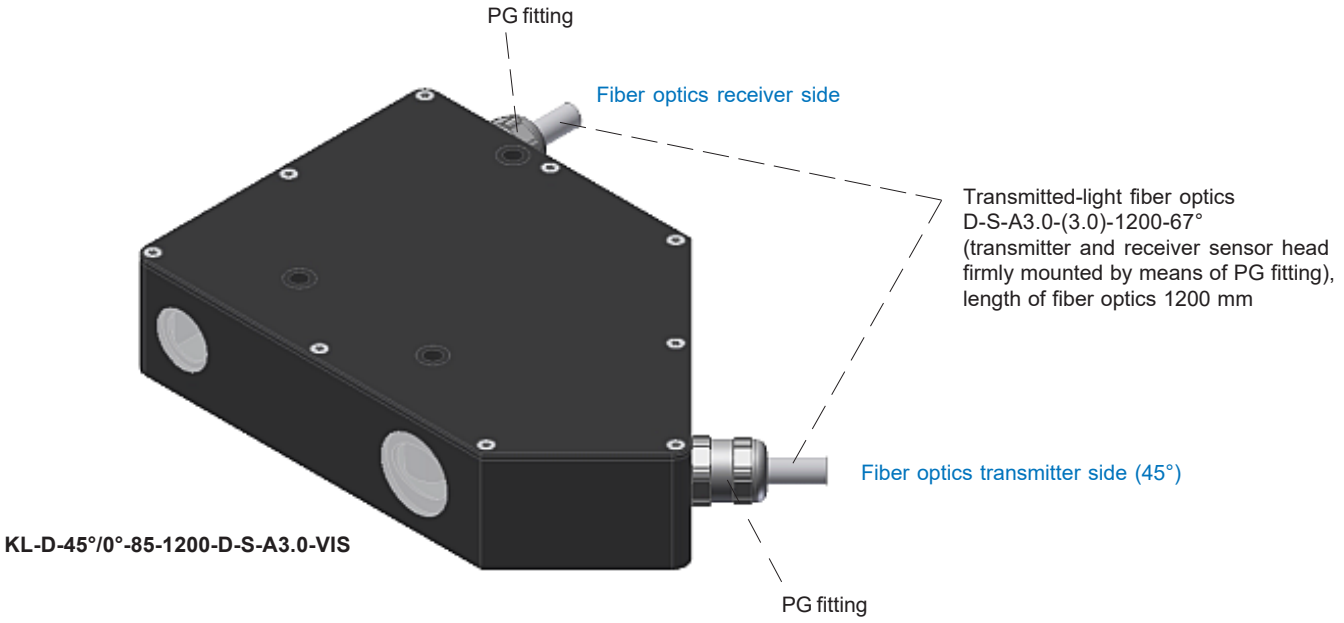

KL-D-45°/0°-85-1200-D-S-A3.0-VIS

Optical Frontends

Optical frontends with integrated transmitted light fiber optics with sensor head type A3.0

KL-D-0°/45°-85-3000-D-S-A3.0-VIS

Optical frontend with integrated transmitted-light fiber optics D-S-A3.0-(3.0)-3000-67°

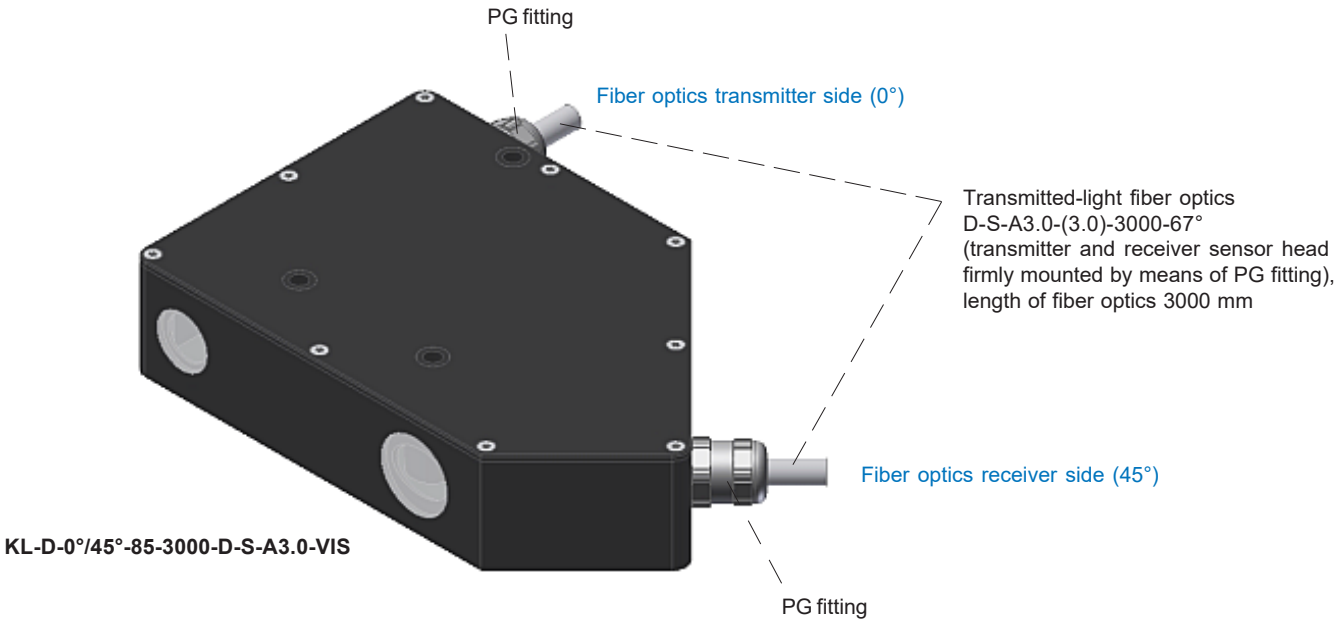

KL-D-45°/0°-85-3000-D-S-A3.0-VIS

Optical frontend with integrated transmitted-light fiber optics D-S-A3.0-(3.0)-3000-67°

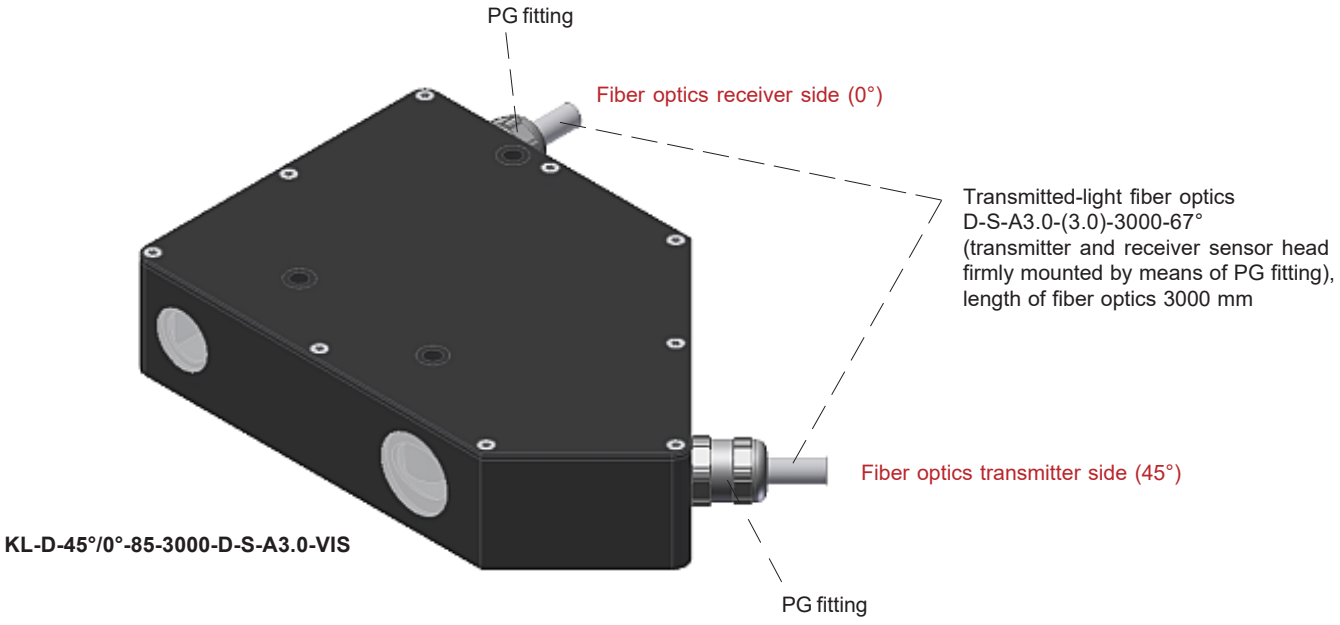

Accessories: Adapter Plate

KL-D-45°/0°-22-d80/d110-A3.0

Flange attachment plate including optics (without transmitted-light fiber optics) for gauge glasses to measure the color of objects behind the glass plate.
Suitable for transmitted-light fiber optics D-S-A3.0-(3.0)-...-67° in conjunction with a color measurement sensor SPECTRO-3-FIO-MSM-ANA-DL or SPECTRO-3-FIO-MSM-DIG-DL

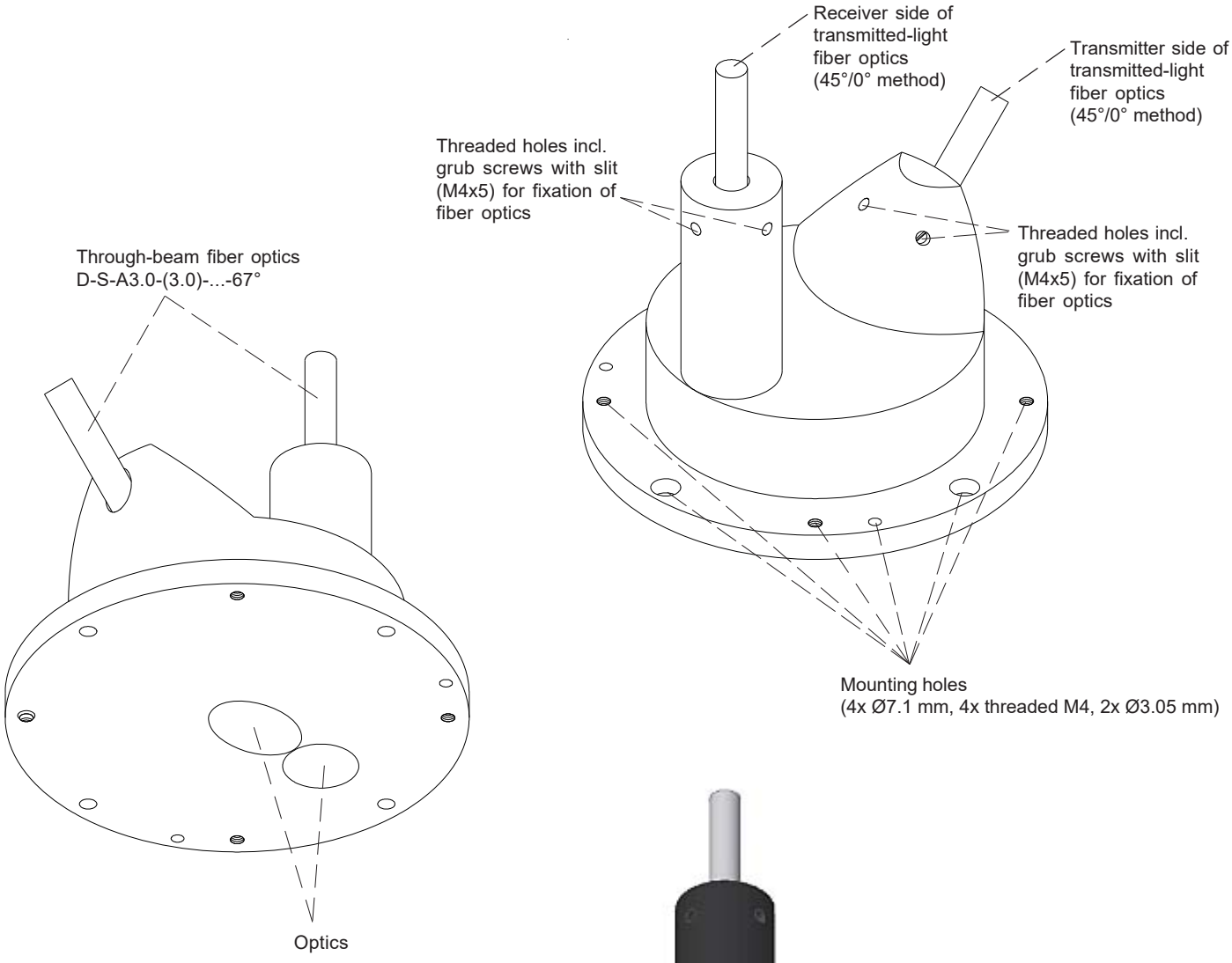



Accessories: Adapter Plate

KL-D-45°/0°-22-d80/d110-A3.0
Flange attachment plate

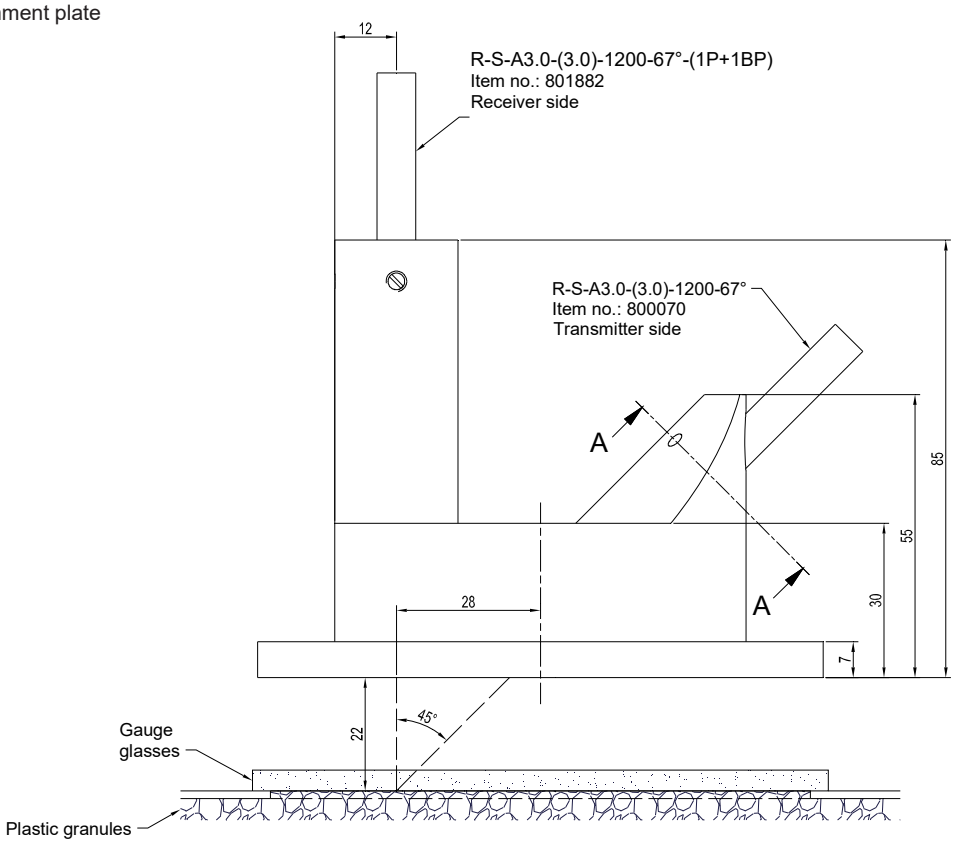

Section A-A

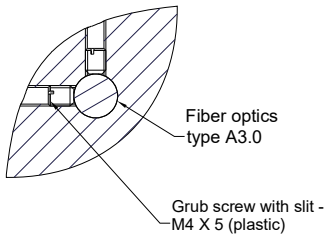

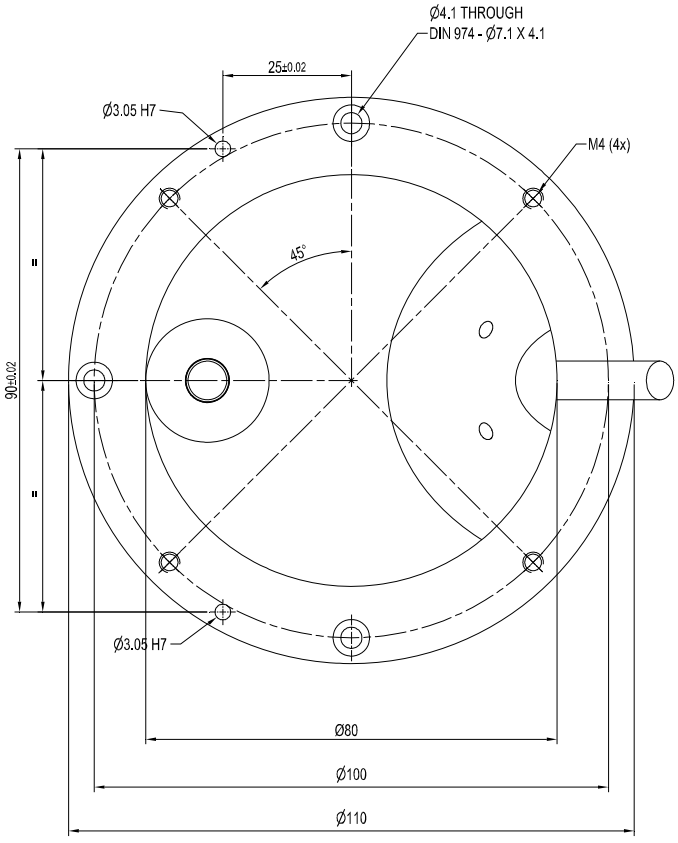

All dimensions in mm