L-LAS Series

L-LAS-TB-50-T-AL-SC
L-LAS-TB-50-R-AL-SC

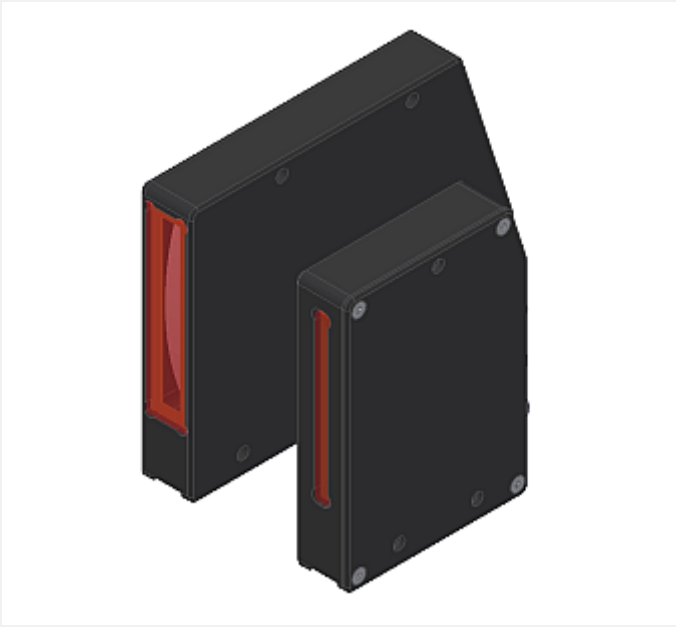

- Line sensor system for spray jet control
- Through-beam version, visible laser line, light curtain 50 mm
- Line laser, Popt <0.39 mW, wave length 670 nm, laser class 1
- Measuring range typ. 48 mm
- Resolution typ. 64 µm
- Switching frequency max.1 kHz
- Working distance up to 2000 mm
- Integrated interference filter
- Line detector with 768 pixel
- RS232 user interface (USB or Ethernet converter optional)
- 2 digital inputs, 3 digital outputs
- Analog output adjustable via software (0 ... +10V or 4 ... 20mA)
- Multi-edge evaluation of the video signal
- Switching state indication via 4 two-color LEDs (2x red/grn, 2x yel/grn)

Design

Product name:

L-LAS-TB-50-T-AL-SC (Transmitter)
L-LAS-TB-50-R-AL-SC (Receiver)
(Receiver incl. Windows® PC software
L-LAS-Spray-Control-Scope as of V2.0)

Accessories: (cf. pages 8-9)

TRA-L-LAS-TB-CL-...
ABL-TB-50-CL

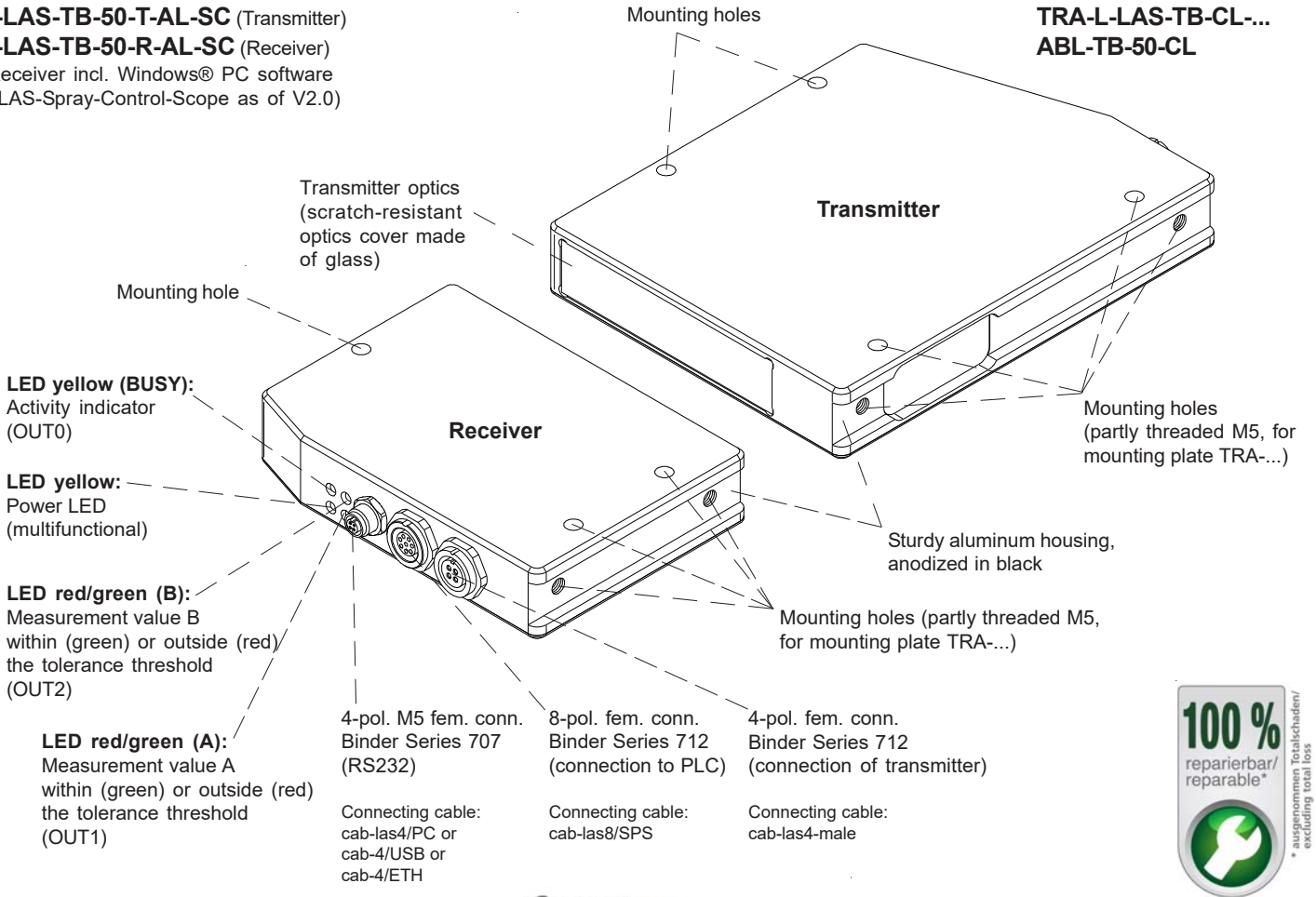

100 % reparierbar/ reparable* * ausgenommen Totalschaden/ excluding total loss

Technical Data

Type	**L-LAS-TB-50-T-AL-SC** **L-LAS-TB-50-R-AL-SC**
Laser	Semiconductor laser, 670 nm, DC operation, < 0.39 mW max. opt. power, laser class 1 acc. to DIN EN 60825-1. The use of these laser sensors therefore requires no additional protective measures.
Working distance	distance transmitter/receiver: up to 2000 mm
Measuring range	typ. 48 mm
Resolution	typ. 64 µm
Reproducibility	typ. ± 64 µm
Linearity	typ. 0.2% FSR (full scale range)
Optical filter	Interference filter
Analog output (1x)	voltage output 0 ... +10V or current output 4 ... 20mA (adjustable under Windows® via PC)
Digital outputs (3x) (OUT0, OUT1, OUT2)	OUT0 (BUSY): Activity indicator OUT1 (A): Measurement value A within (green) or outside (red) the tolerance threshold OUT2 (B): Measurement value B within (green) or outside (red) the tolerance threshold pnp bright-switching/npn dark-switching or pnp dark-switching/npn bright-switching, adjustable under Windows®, 100 mA, short-circuit proof
Digital inputs (2x) (IN0, IN1)	IN0: Extern trigger, IN1: White balance input voltage +Ub/0V, with protective circuit
Voltage supply	+24VDC (± 10%)
Sensitivity setting	under Windows® via PC
Laser power correction	adjustable under Windows® via PC
Current consumption	typ. 200 mA
Enclosure rating	electronics and optics: IP67
Operating temperature range	-10°C ... +50°C
Storage temperature range	-20°C ... +85°C
Housing material	aluminum, anodized in black
Housing dimensions	transmitter: LxWxH approx. 125 mm x 98 mm x 20 mm (without flange connectors) receiver: LxWxH approx. 70 mm x 98 mm x 20 mm (without flange connectors)
Connectors receiver	8-pole circular female connector type Binder 712 (PLC/Power) 4-pole M5 circular female connector type Binder 707 (RS232/PC) 4-pole circular female connector type Binder 712 (connection to transmitter)
Connector transmitter	4-pole circular female connector type Binder 712 (connection to receiver)
LED display	LED red/green: OUT1 (A): Measurement value A within (green) or outside (red) the tolerance threshold LED red/green: OUT2 (B): Measurement value B within (green) or outside (red) the tolerance threshold LED yellow (BUSY): Activity indicator OUT0 LED yellow: POWER (multifunctional)
EMC test acc. to	DIN EN 60947-5-2 CE
Switching frequency	max. 1 kHz
Max. switching current	100 mA, short-circuit proof
Interface	RS232, parameterisable under Windows®
Connecting cables	Connection to PC: cab-las4/PC or cab-4/USB or cab-4/ETH Connection to PC: cab-las8/SPS or cab-las8/SPS-w Connecting cable transmitter/receiver: cab-las4-male or cab-las4-male-w
Output polarity	bright/dark switching, can be switched under Windows®

Dimensions

L-LAS-TB-50-T-AL-SC
(Transmitter)

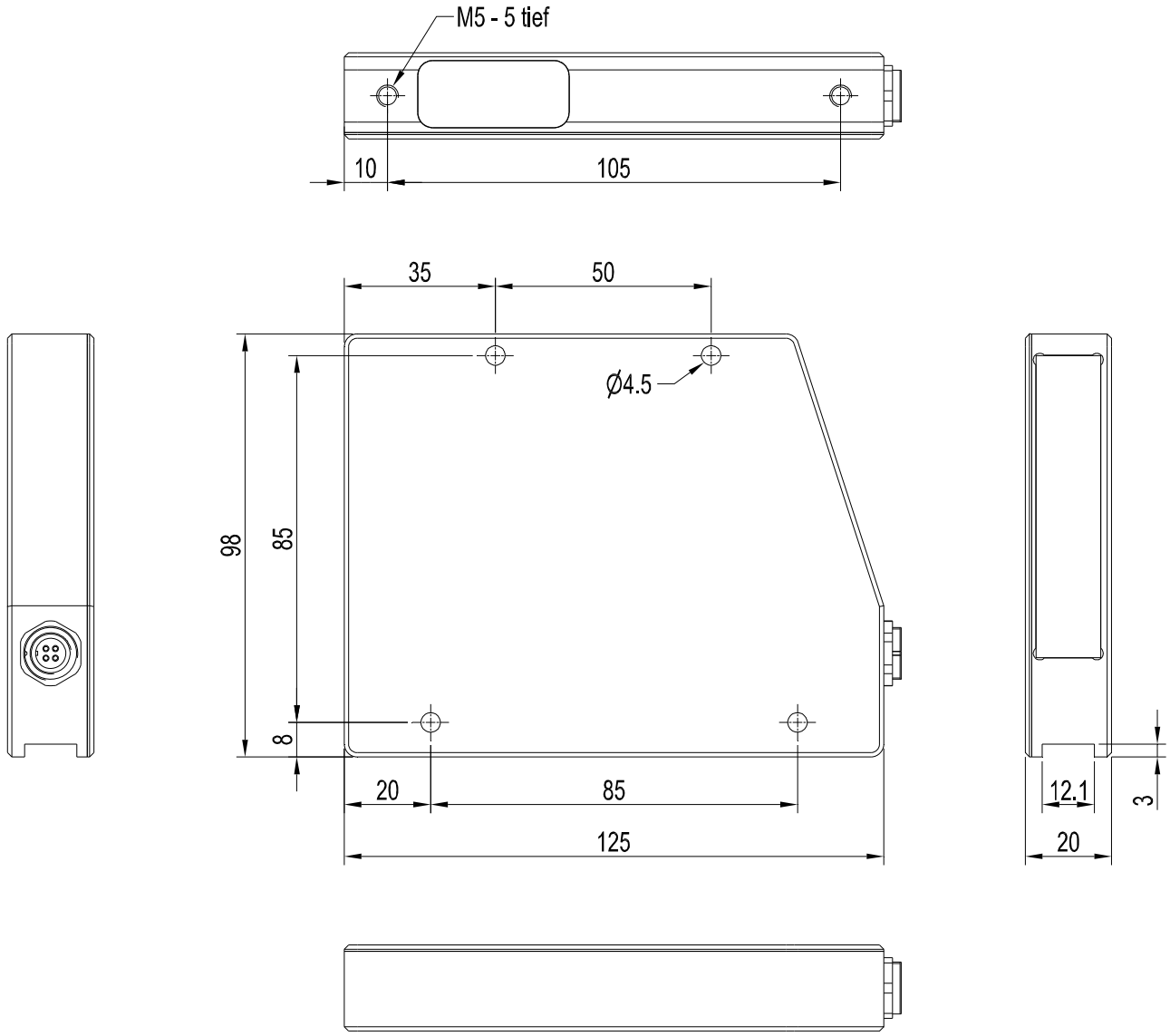

All dimensions in mm

Dimensions

L-LAS-TB-50-R-AL-SC
(Receiver)

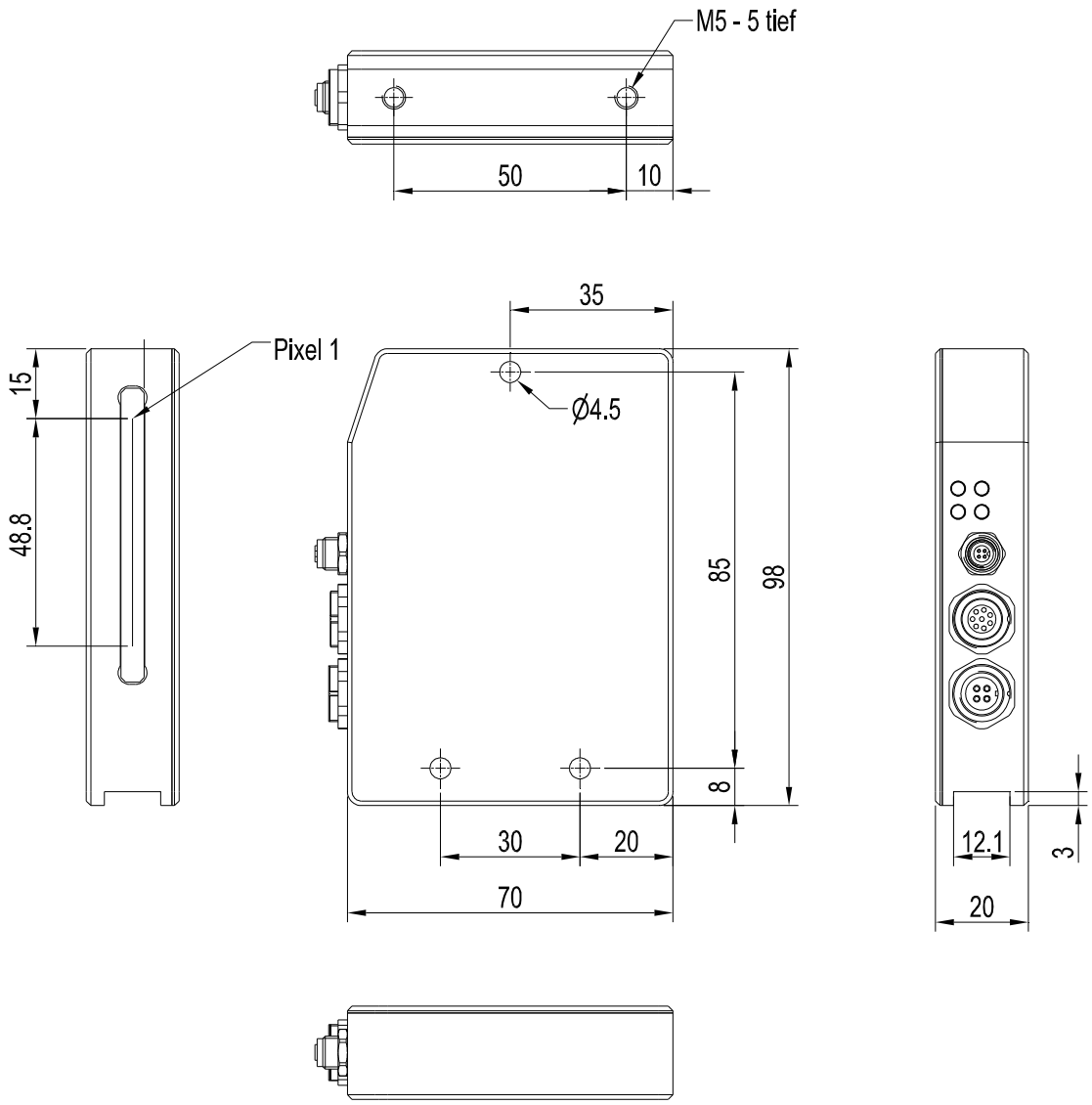

All dimensions in mm

Connector Assignment

Connection L-LAS-TB-...-R-AL-SC (Receiver) to PLC:
8-pole fem. connector Binder Series 712

Pin:	Color:	Assignment:
1	white	GND (0V)
2	brown	+24VDC (± 10%)
3	green	IN0 (EXT TRIGGER)
4	yellow	IN1 (WHT BALANCE)
5	grey	OUT0 (BUSY)
6	pink or black	OUT1 (ERR EVAL A)
7	blue	OUT2 (ERR EVAL B)
8	red	ANA (voltage 0...+10V or current 4...20mA)

Connecting cable:
cab-las8/SPS-(length) or
cab-las8/SPS-w-(length) (angle type 90°)
(standard length 2m)

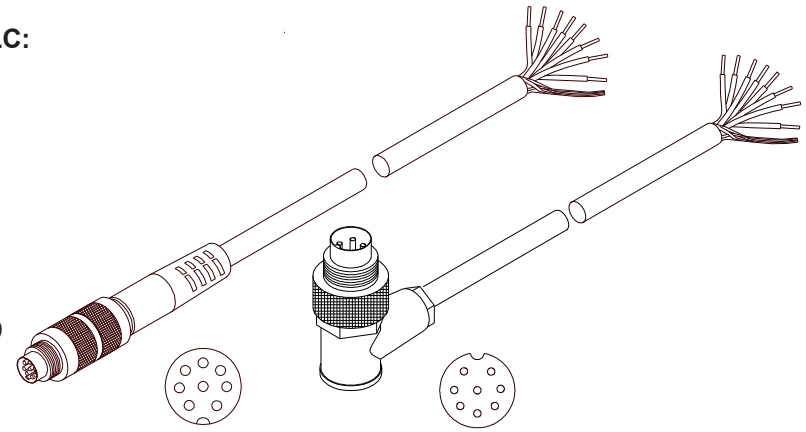

cab-las8/SPS-...
(max. length 25m,
outer jacket: PUR)

cab-las8/SPS-w-...
(max. length 25m,
outer jacket: PUR)

Connection L-LAS-TB-...-R-AL-SC (Receiver) to PC:
4-pole fem. connector Binder Series 707

Pin:	Assignment:
1	+24VDC (+Ub, OUT)
2	GND (0V)
3	RxD
4	TxD

Connection via RS232 interface at the PC:
Connecting cable:
cab-las4/PC-(length)
cab-las4/PC-w-(length) (angle type 90°)
(standard length 2m)

alternative:
Connection via USB interface at the PC:
USB converter (incl. driver software):
cab-4/USB-(length)
cab-4/USB-w-(length) (angle type 90°)
(standard length 2m)

alternative:
Connection to local network via Ethernet bus:
Ethernet converter (incl. software „SensorFinder“):
cab-4/ETH-500
(standard length 0.5m)

Optional: External CAT5 cable, e.g.
cab-eth/M12D-RJ45-flx-(length)

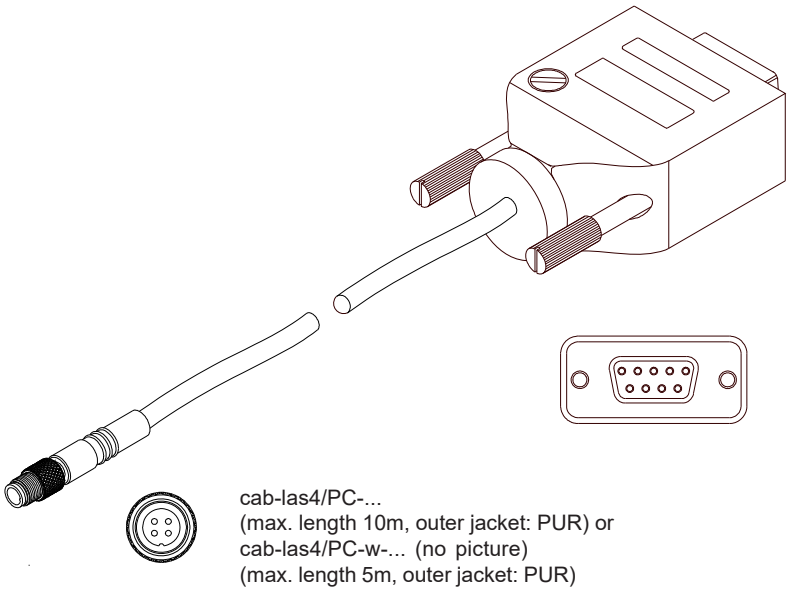

cab-las4/PC-...
(max. length 10m, outer jacket: PUR) or
cab-las4/PC-w-... (no picture)
(max. length 5m, outer jacket: PUR)

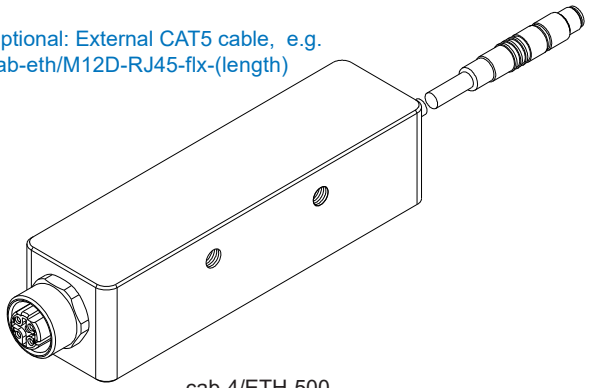

cab-4/ETH-500
(length 0.5m, outer jacket: PUR)
4-pole M12 fem. conn. (D-coded)
for connection of an external
CAT5 cable, e.g.
cab-eth/M12D-RJ45-flx-(length)

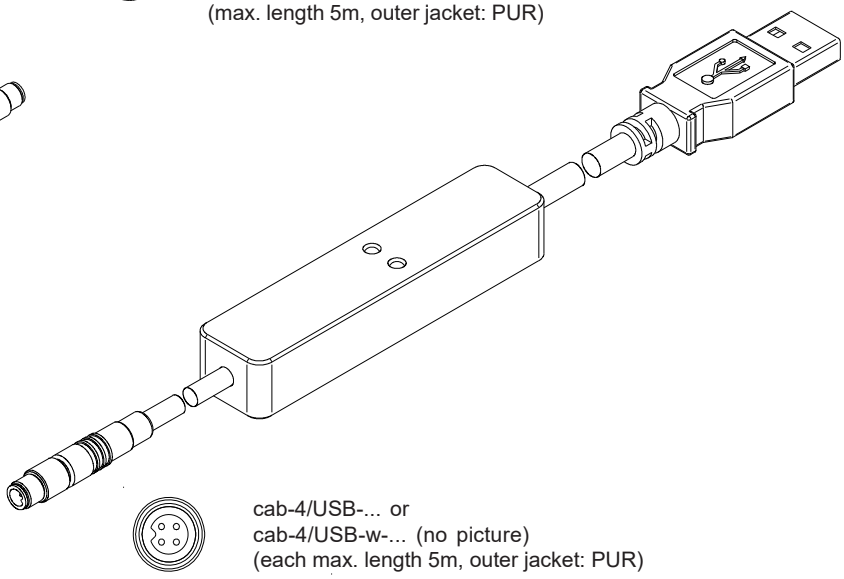

cab-4/USB-... or
cab-4/USB-w-... (no picture)
(each max. length 5m, outer jacket: PUR)

Connector Assignment

Connection L-LAS-TB-...-T-AL-SC (Transmitter)
with L-LAS-TB-...-R-AL-SC (Receiver)
4-pole female connector Binder Series 712

Pin:	Assignment:
1	+5VDC
2	0V (GND)
3	I-CONTROL (0V ... +5V)
4	not connected

Connecting cable:
cab-las4-male-(length)
cab-las4-male-w-(length) (angle type 90°)
(standard length 2m)

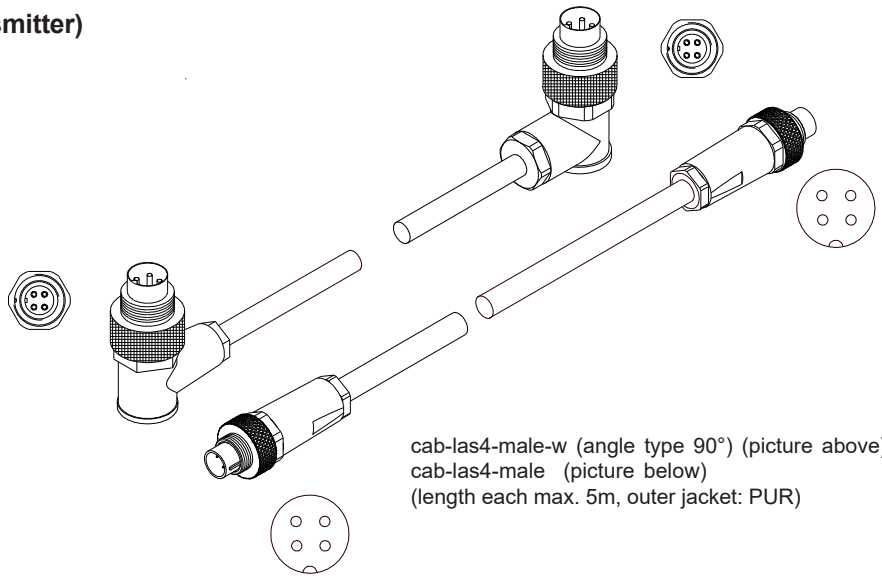

cab-las4-male-w (angle type 90°) (picture above) or
cab-las4-male (picture below)
(length each max. 5m, outer jacket: PUR)

LED Display

L-LAS-TB-50-R-AL-SC
(Receiver)

OUT1 (A) **Power**

OUT2 (B) **Busy**

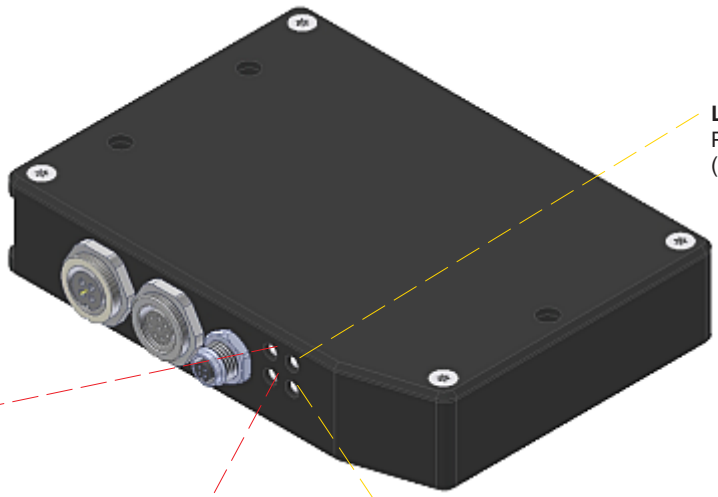

LED yellow:
Power LED
(multifunctional)

LED red/green (A):
Measurement value A
within (green) or outside (red)
the tolerance threshold (OUT1)

LED red/green (B):
Measurement value B
within (green) or outside (red)
the tolerance threshold (OUT2)

LED yellow (BUSY):
Activity indicator
(OUT0)

Laser Information

The laser transmitters of L-LAS-TB series comply with laser class 1 according to EN 60825-1. Under reasonably foreseeable conditions a class 1 laser is safe.
The reasonably foreseeable conditions are kept during specified normal operation.
The use of these laser transmitters therefore requires no additional protective measures.

The laser transmitters of L-LAS-TB series are supplied with an information label „CLASS 1 Laser Product“.



Class 1 Laser Product
IEC 60825-1: 2014
P<0.39 mW; λ=670 nm
COMPLIES WITH 21 CFR 1040.10 AND 1040.11
EXCEPT FOR CONFORMANCE WITH IEC 60825-1
ED. 3, AS DESCRIBED IN
LASER NOTICE NO. 56, DATED MAY 8, 2019.

Parameterization

Windows® user interface:

(The current software version is available for download on our website.)

The L-LAS-TB-...-AL-SC sensor can be easily parameterised with the Windows® user interface L-LAS-Spray-Control-Scope (as of V2.0). For this purpose the sensor is connected to the PC with the serial interface cable cab-las4/PC (or cab-4/USB or cab-4/ETH). When parameterisation is finished, the PC can be disconnected again.

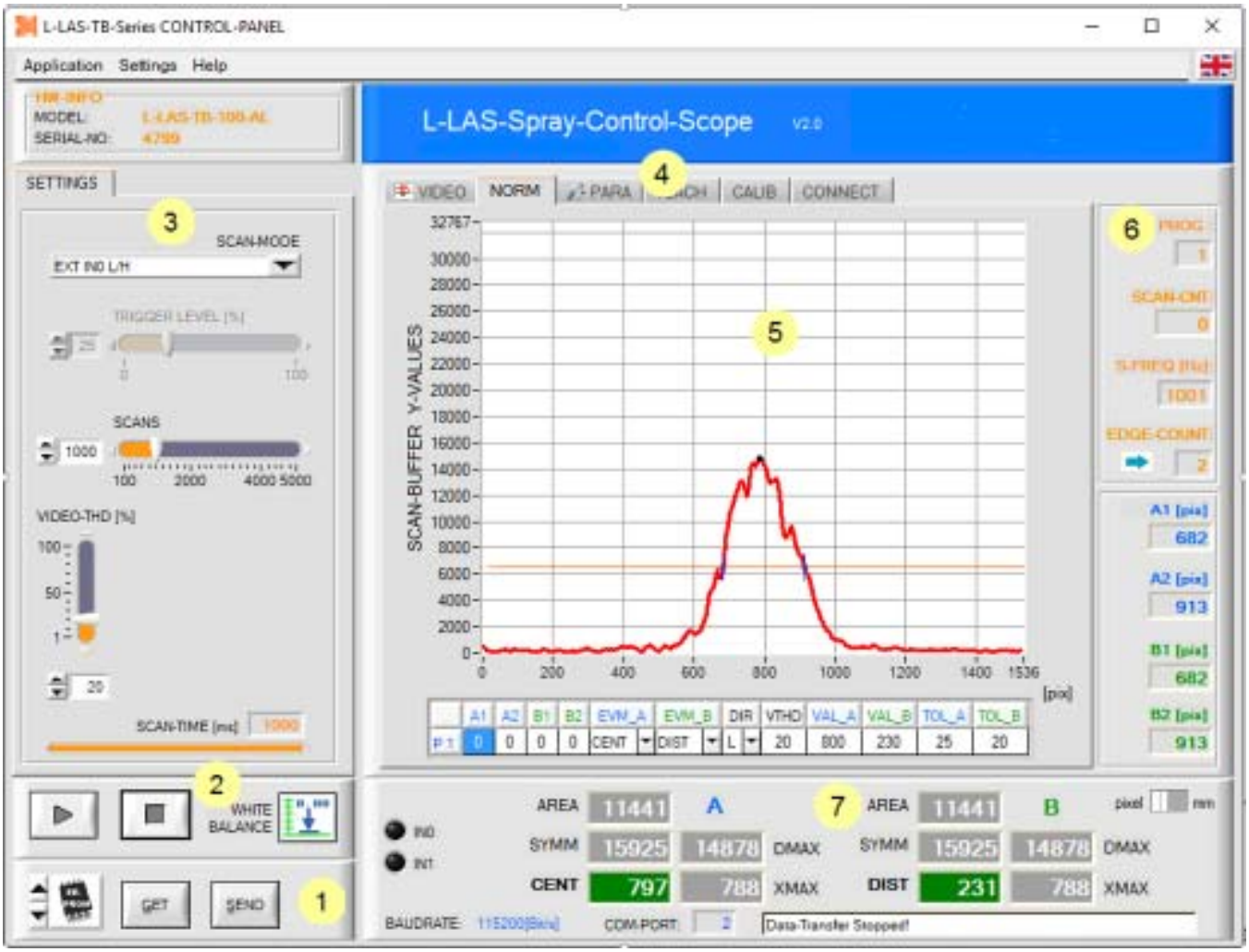

The L-LAS-Spray-Control-Scope user interface provides a great variety of functions:

- Visualization of measurement data in numeric and graphic output fields.
- Setting of the light source.
- Setting of the polarity of the digital switching outputs OUT0, OUT1, OUT2
- Selection of a suitable evaluation mode.
- Saving of parameters to the RAM, EEPROM memory of the control unit, or to a configuration file on the hard disk of the PC.

1 Function fields for sending / reading the setting parameters (parameter transfer).
2 START / STOP function fields for the RS232 data exchange with the sensor.
3 Presetting of current parameters at the sensor (trigger mode, evaluation threshold...).
4 Tab row to switch between different tab graphic windows.
5 Graphic output (display of the measured value over time, with teach value and tolerance band).
6 Numeric display elements (measuring frequency, number of edges, program number, ...).
7 Measured value display in [mm] or [pixel].

Accessories

Mounting plate for L-LAS-TB-50-T-AL-SC (Transmitter) and L-LAS-TB-50-R-AL-SC (Receiver):
(please order separately)

TRA-L-LAS-TB-CL-L400 (total length 400 mm, max. transmitter/receiver distance cf. chart below)
TRA-L-LAS-TB-CL-L600 (total length 600 mm, max. transmitter/receiver distance cf. chart below)
TRA-L-LAS-TB-CL-L800 (total length 800 mm, max. transmitter/receiver distance cf. chart below)
(Aluminium housing, anodized in black)

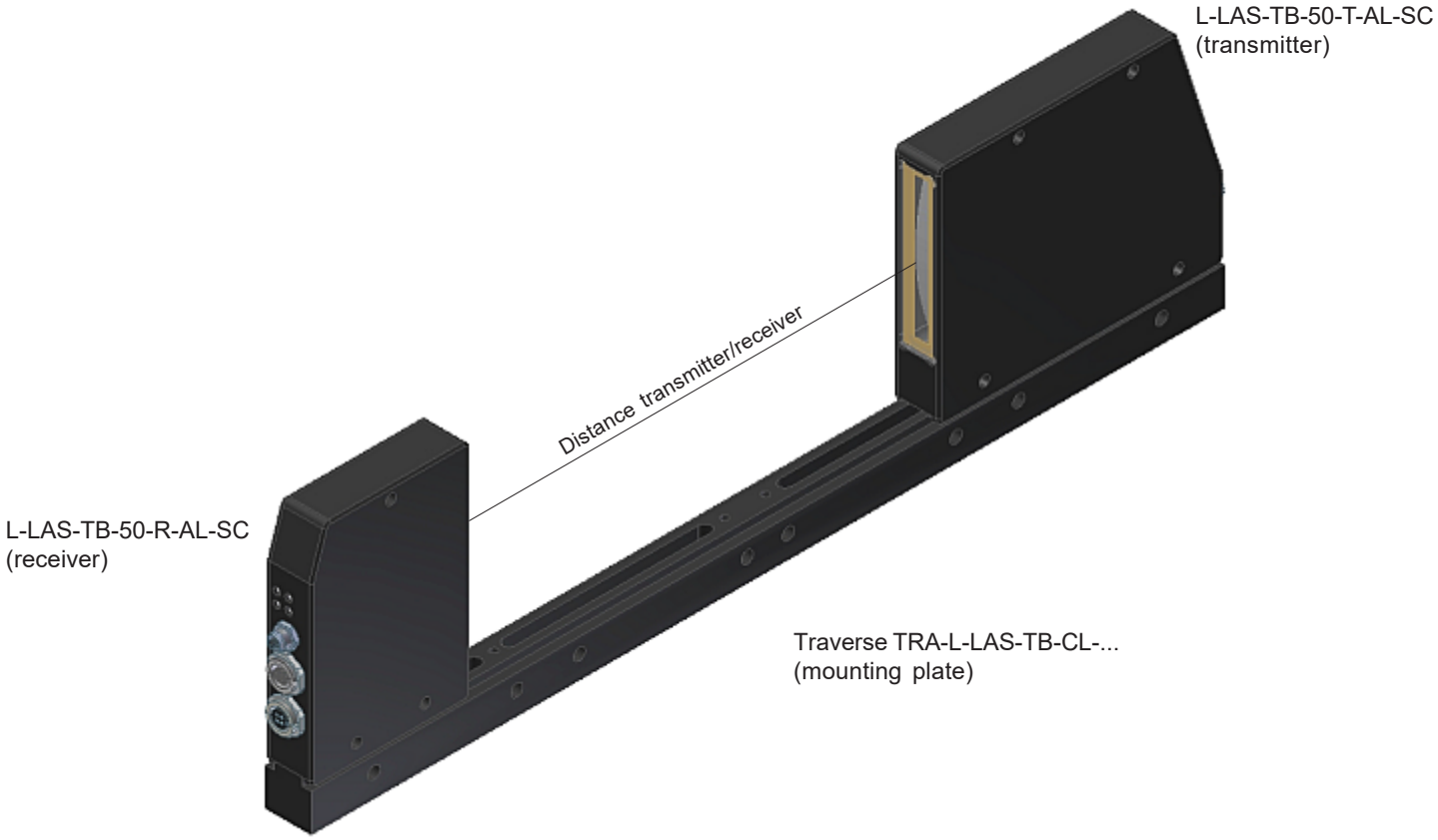

Max. distance T/R in case of use of mounting plate:	**TRA-L-LAS-TB-CL--L400**	**TRA-L-LAS-TB-CL--L600**	**TRA-L-LAS-TB-CL--L800**
L-LAS-TB-28-T-AL-SC **L-LAS-TB-28-R-AL-SC**	max. distance T/R: 222 mm	max. distance T/R: 422 mm	max. distance T/R: 622 mm
L-LAS-TB-50-T-AL-SC **L-LAS-TB-50-R-AL-SC**	max. distance T/R: 205 mm	max. distance T/R: 405 mm	max. distance T/R: 605 mm
L-LAS-TB-75-T-AL-SC **L-LAS-TB-75-R-AL-SC**	max. distance T/R: 200 mm	max. distance T/R: 400 mm	max. distance T/R: 600 mm
L-LAS-TB-100-T-AL-SC **L-LAS-TB-100-R-AL-SC**	max. distance T/R: 160 mm	max. distance T/R: 360 mm	max. distance T/R: 560 mm

Accessories

Blast air top part:

ABL-TB-50-CL
(Plastic housing, black, please order separately for each transmitter and receiver)

suitable for:
L-LAS-TB-50-T-AL-SC (Transmitter) **and**
L-LAS-TB-50-R-AL-SC (Receiver)

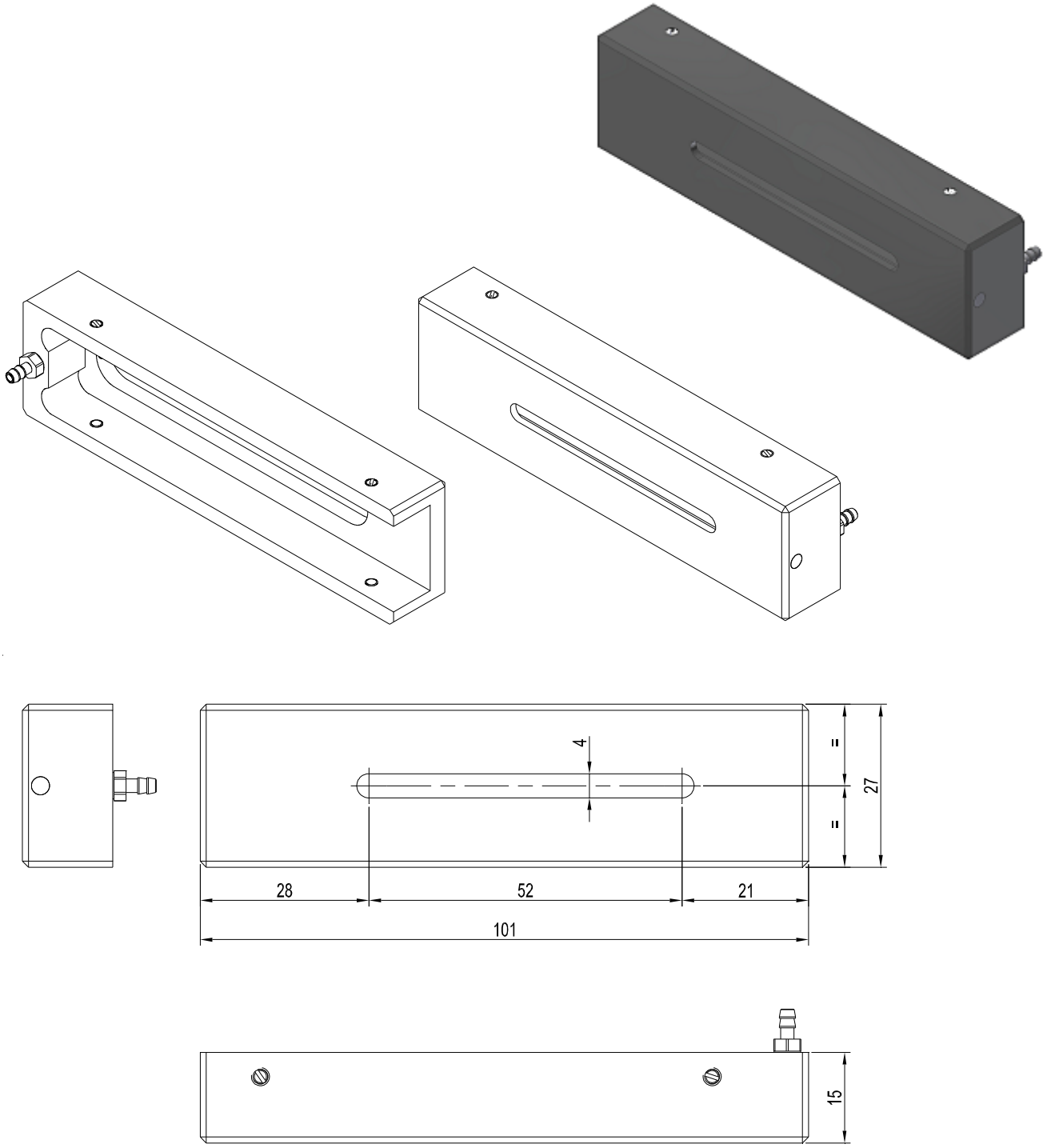

All dimensions in mm