# GLAST Series

## GLAST-135-0°-...

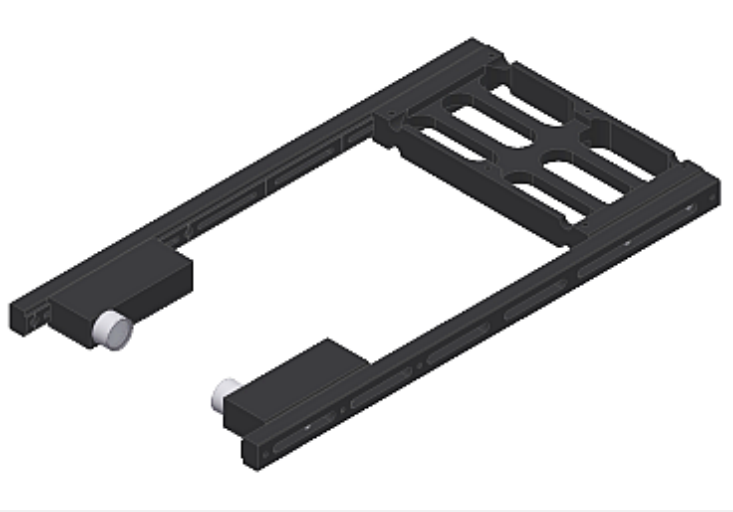

- **Determination of the forward scattering of transparent films** using spatial frequency analysis (frequency and amplitude). The diffusely illuminated (homogeneous backlighting) line grid is imaged on a line detector using receiving optics. The transparent film to be examined is located between the transmitter and receiver.
- **Also suitable for inspection of glass plates (flat glass)**
- Diffuse lighting with three different line grids available (0.5/0.5, 1.0/1.0 or 2.0/2.0)
- Measurement distance: 135 mm ± 2 mm
- Up to 31 states can be saved
- Line detector (512 pixel) incl. projection lens
- RS232 interface (USB or Ethernet converter available)
- Haze control
- Brightness correction can be activated (STAT/DYN)
- Several TEACH functions (via PC or PLC)
- Various evaluation algorithms can be activated
- „BEST HIT“ mode
- Switching state indication by means of 5 yellow LEDs
- Parameterizable via Windows® software
- Temperature compensated
- Sturdy aluminum housing, anodized in black
- Guide rails available in various lengths

## Design

**Product name:**

**GLAST-135-0°-0.5/0.5**
**GLAST-135-0°-1.0/1.0**
**GLAST-135-0°-2.0/2.0**
(incl. Windows® PC software STRUCT-Scope)

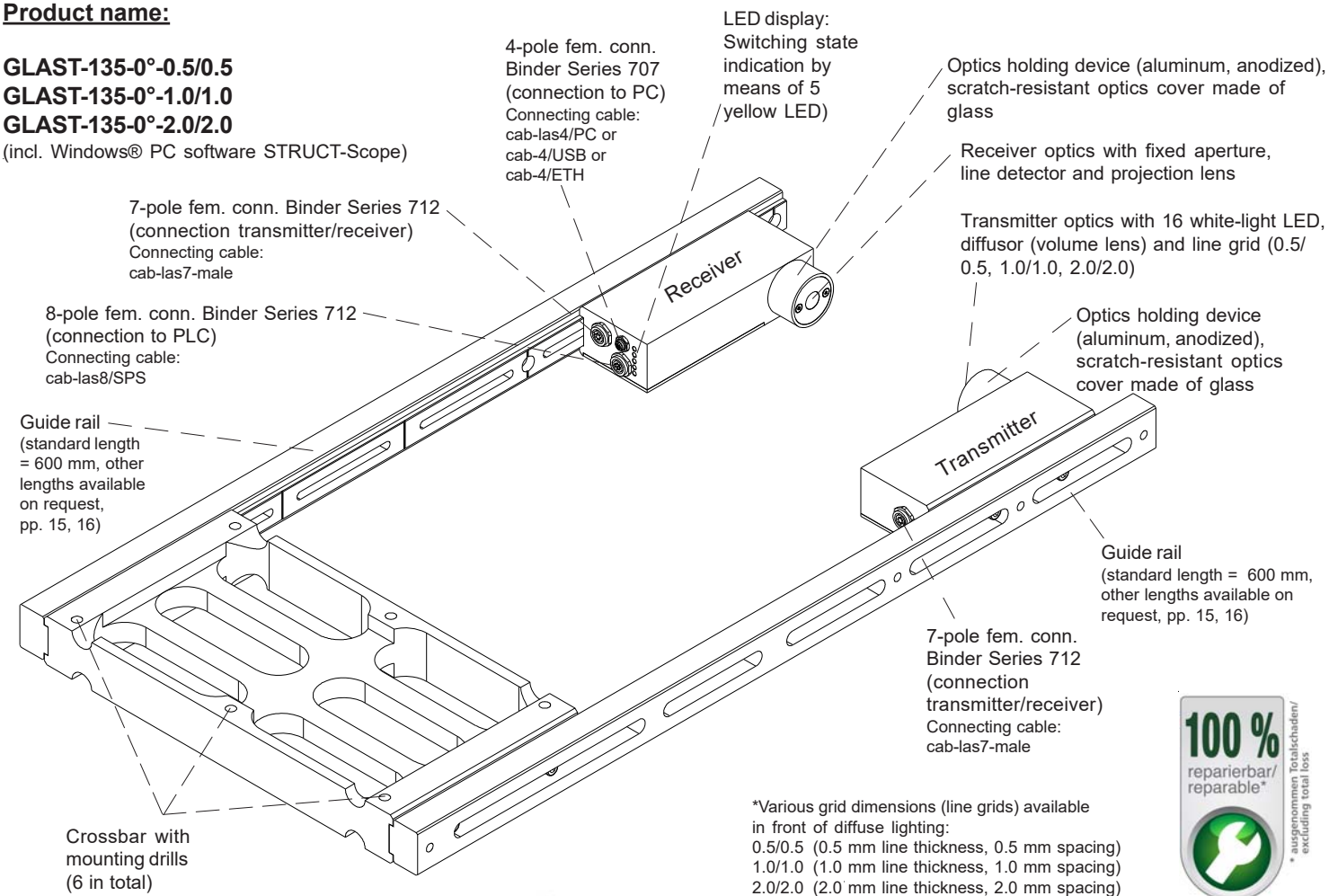


*Various grid dimensions (line grids) available in front of diffuse lighting:
0.5/0.5 (0.5 mm line thickness, 0.5 mm spacing)
1.0/1.0 (1.0 mm line thickness, 1.0 mm spacing)
2.0/2.0 (2.0 mm line thickness, 2.0 mm spacing)

100 % reparierbar/ reparable* * ausgenommen Totalschaden/ excluding total loss

## Technical Data

| Type | GLAST-135-0°-... |
|---|---|
| Voltage supply | +24VDC (± 10%), reverse polarity protected, overcurrent protected |
| Current consumption | < 500 mA |
| Max. switching current | 100 mA, short circuit proof |
| Switching state indication | 5 yellow LED visualize the physical state of the outputs OUT0 ... OUT4 |
| Inputs digital | 1 digital input: IN0 (Pin 3), digital (0V/+24V) |
| Outputs digital | OUT0...OUT4 (Pin 4..8): digital (0V/+24V), pn-/pnp-able (bright-/dark-switching, can be switched) |
| Interface | RS232 |
| Pulse lengthening | 100 ms ... 1 s (adjustable via PC software) |
| Averaging | max. 32 values (adjustable via PC software) |
| Line grid<br>(grid dimension) | Various line grids available:<br>GLAST-135-0°-0.5/0.5: Line grid with 0.5 mm line thickness and 0.5 mm spacing<br>GLAST-135-0°-1.0/1.0: Line grid with 1.0 mm line thickness and 1.0 mm spacing<br>GLAST-135-0°-2.0/2.0: Line grid with 2.0 mm line thickness and 2.0 mm spacing |
| Max. measuring frequency | typ. 10 Hz |
| Angle of incidence | typ. vertical incidence of light on the object |
| Measuring distance | transmitter/receiver distance typ. 135 mm ± 2mm<br>(object is typ. placed centrally between transmitter and receiver) |
| Transmitter (light source) | 16 super-bright white-light LED, diffusor (volume lens) and line grid |
| Transmitter control | Can be switched via PC software: AC operation (LED MODE-AC), DC operation (LED MODE-DC), |
| Receiver | line detector (512 pixel), projection lens, pinhole aperture (Ø 1 mm) |
| Exposure time | adjustable via PC software (EXPOSURE TIME) |
| Detection range | Measuring length typ. 20 mm at a distance of 135 mm |
| Temperature drift X,Y | ΔX/ΔT; ΔY/ΔT typ. 0.2 digits/°C (< 0.01% / °C) |
| Resolution | 20mm/4096 |
| Memory capacity | 5 spatial frequency spectrums (max. 31 states) |
| Housing dimensions | GLAST-135-0°-...: LxWxH approx. 600 mm x 323 mm x 34 mm (without connectors)<br>GLAST-135-0°-T-... (Transmitter): LxWxH approx. 135 mm x 34 mm x 74.3 mm (without connector)<br>GLAST-135-0°-R -... (Receiver): LxWxH approx. 135 mm x 34 mm x 74.3 mm (without connectors) |
| Housing material | Aluminum, anodized in black (optics holding device: aluminum, anodized) |
| Enclosure rating | IP64 |
| Connecting cables | to PLC: cab-las8/SPS or cab-las8/SPS-w<br>to PC/RS232 interface: cab-las4/PC or cab-las4/PC-w<br>alternatively: to PC/USB interface: cab-4/USB or cab-4/USB-w<br>alternatively: to PC/Ethernet interface: cab-4/ETH |
| Type of connector | Connection to PLC: 8-pole fem. connector (Binder 712),<br>connection to PC: 4-pole fem. connector (Binder 707) |
| Temperature ranges | Operating temperature range: -20°C ... +55°C, storage temperature range: -20°C ... +85°C |
| EMC test acc. to | DIN EN 60947-5-2 CE |

## Dimensions

**GLAST-135-0°-0.5/0.5**
**GLAST-135-0°-1.0/1.0**
**GLAST-135-0°-2.0/2.0**

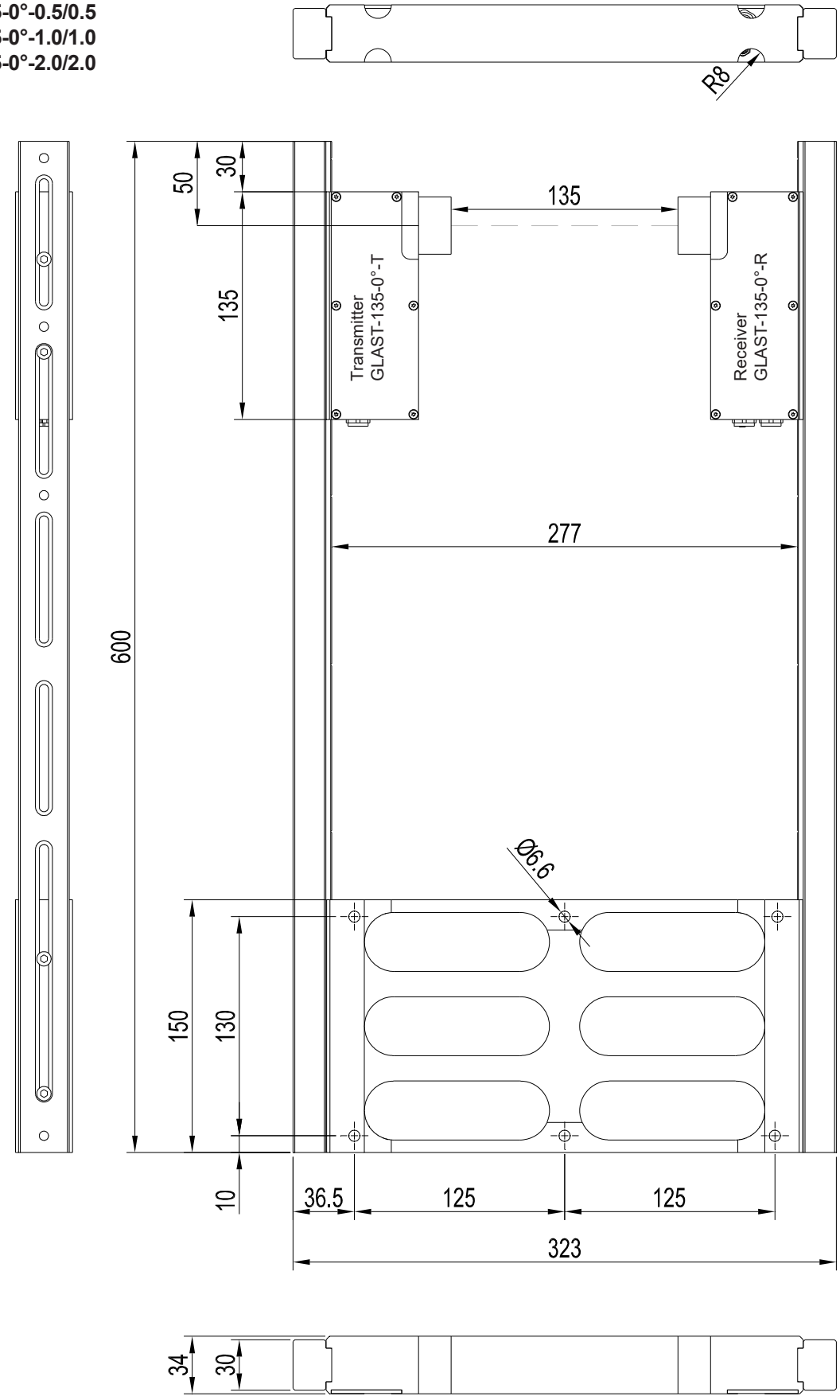


All dimensions in mm

## Dimensions

**GLAST-135-0°-T**
**(Transmitter)**

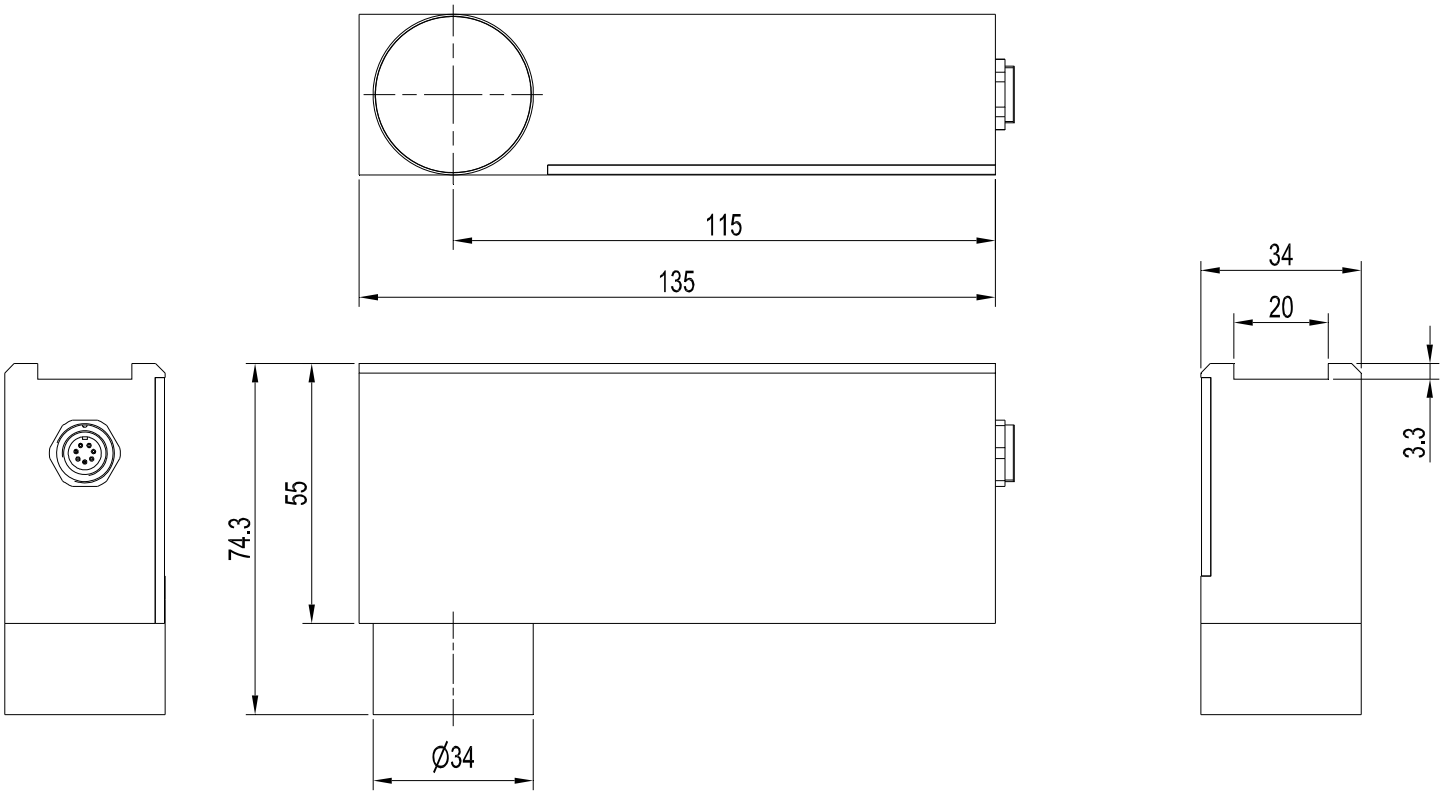


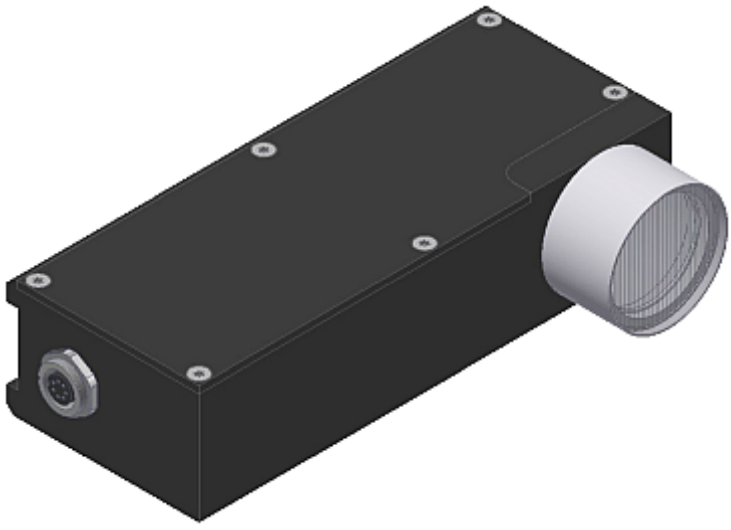

All dimensions in mm

## Dimensions

**GLAST-135-0°-R**
**(Receiver)**

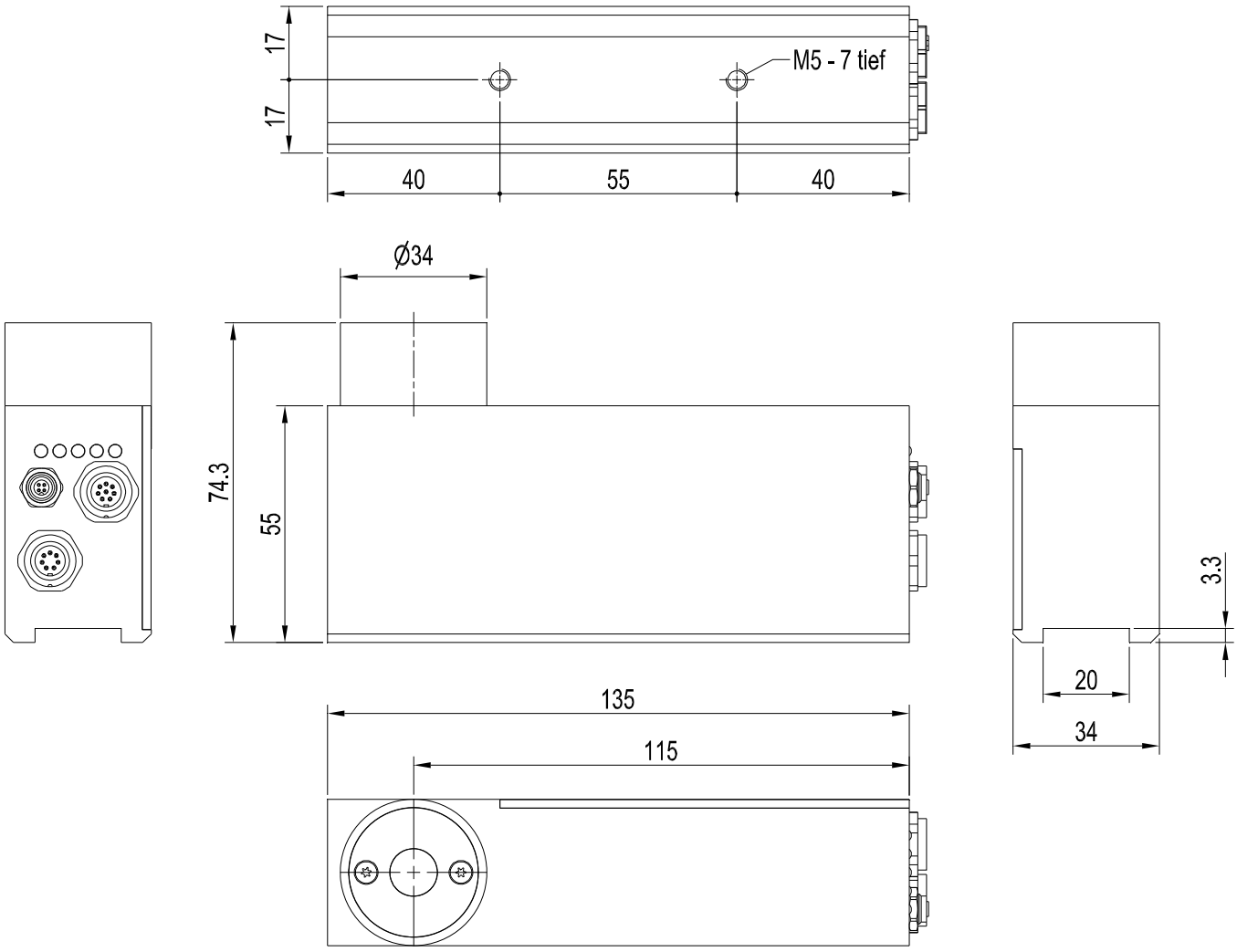


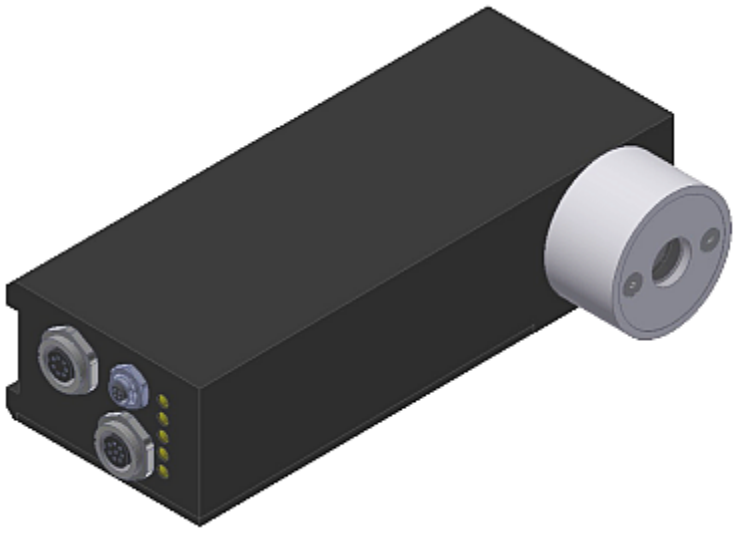

All dimensions in mm

## Working Distance

**Working distance**
**transmitter and receiver**

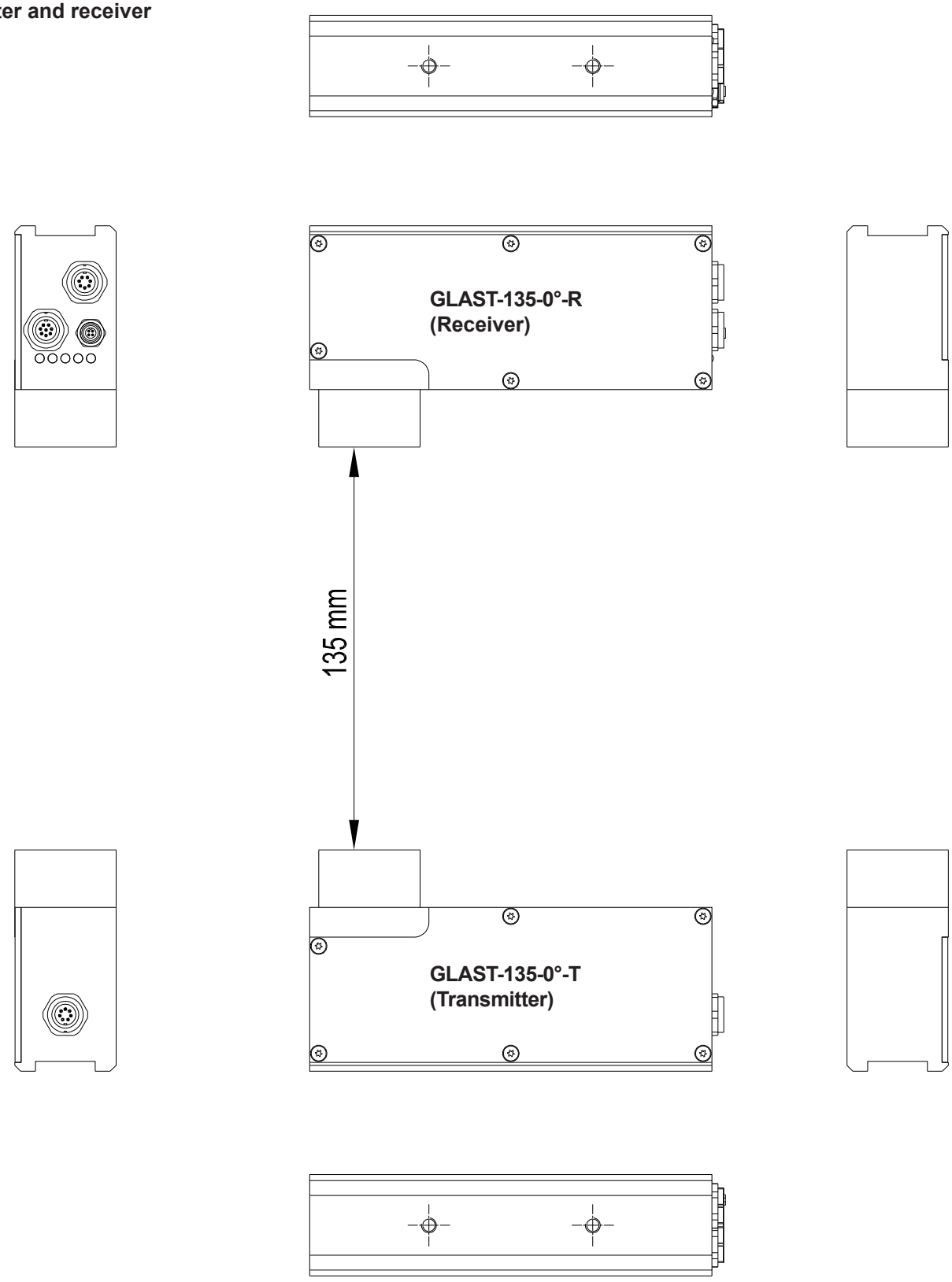

## Connector Assignment

### Connector assignment:

### Connection of GLAST-135-0°-R (Receiver) to PLC:
**8-pole fem. connector Binder Series 712**

| Pin: | Color: | Assignment: |
|---|---|---|
| 1 | white | GND (0V) |
| 2 | brown | +24VDC (±10%) |
| 3 | green | IN0 |
| 4 | yellow | OUT0 |
| 5 | grey | OUT1 |
| 6 | pink or black | OUT2 |
| 7 | blue | OUT3 |
| 8 | red | OUT4 |

Connecting cable:
cab-las8/SPS-(length)
cab-las8/SPS-w-(length) (angle type, 90°)
(standard length 2m)

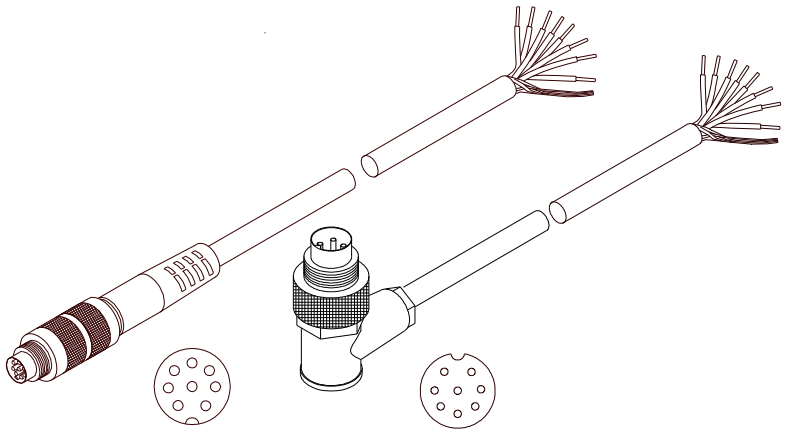

cab-las8/SPS-...
(max. length 25m, outer jacket: PUR)

cab-las8/SPS-w-...
(max. length 25m, outer jacket: PUR)

### Connection of GLAST-135-0°-R (Receiver) to PC:
**4-pole fem. connector Binder Series 707**

| Pin: | Assignment: |
|---|---|
| 1 | +24VDC (+Ub, OUT) |
| 2 | GND (0V) |
| 3 | RxD |
| 4 | TxD |

***Connection via RS232 interface at the PC:***
Connecting cable:
cab-las4/PC-(length)
cab-las4/PC-w-(length) (angle type 90°)
(standard length 2m)

***alternative:***
***Connection via USB interface at the PC:***
Connecting cable (incl. driver software):
cab-4/USB-(length)
cab-4/USB-w-(length) (angle type 90°)
(standard length 2m)

***alternative:***
***Connection to local network via Ethernet bus:***
Ethernet converter (incl. software „SensorFinder“):
cab-4/ETH-500
(standard length 0.5m)

Optional: External CAT5 cable, e.g.
cab-eth/M12D-RJ45-flx-(length)

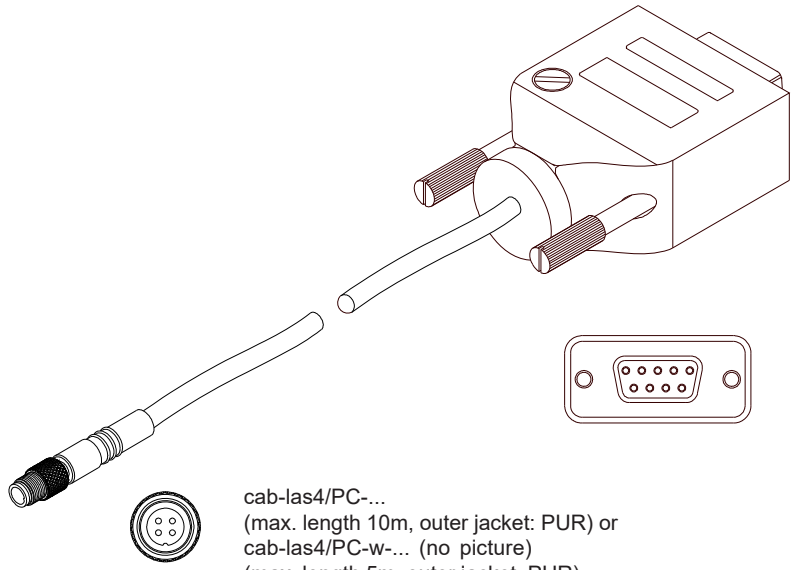

cab-las4/PC-...
(max. length 10m, outer jacket: PUR) or
cab-las4/PC-w-... (no picture)
(max. length 5m, outer jacket: PUR)

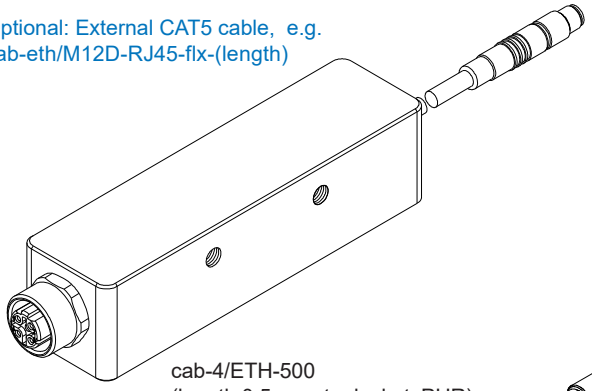

cab-4/ETH-500
(length 0.5m, outer jacket: PUR)
4-pole M12 fem. conn. (D-coded)
for connection of an external
CAT5 cable, e.g.
cab-eth/M12D-RJ45-flx-(length)

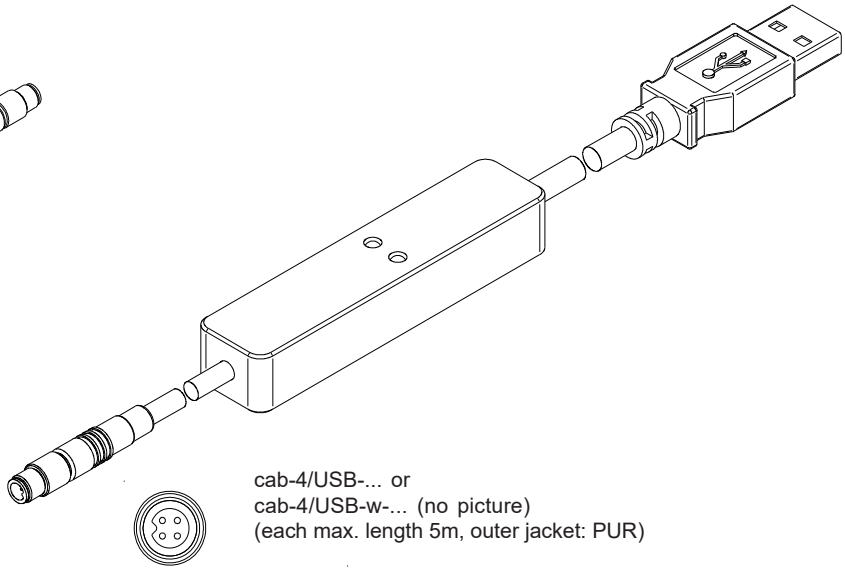

cab-4/USB-... or
cab-4/USB-w-... (no picture)
(each max. length 5m, outer jacket: PUR)

## Connector Assignment

### Connection of GLAST-135-0°-R (Receiver) to and GLAST-135-0°-T (Transmitter)
**7-pole fem. connector Binder Series 712**

| Pin: | Assignment: |
|---|---|
| 1 | GND (0V) |
| 2 | +3.3VDC |
| 3 | SS |
| 4 | MISO |
| 5 | MOSI |
| 6 | SCLK |
| 7 | +3.3VDC |

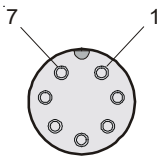


Connecting cable:
cab-las7-male-(length) or
cab-las7-male-w-(length) (90° gewinkelt) VAR. 1 or
cab-las7-male-w-(length) (90° gewinkelt) VAR. 2 or
cab-las7-male-w-(length) (90° gewinkelt) VAR. 3
(standard length 1m)

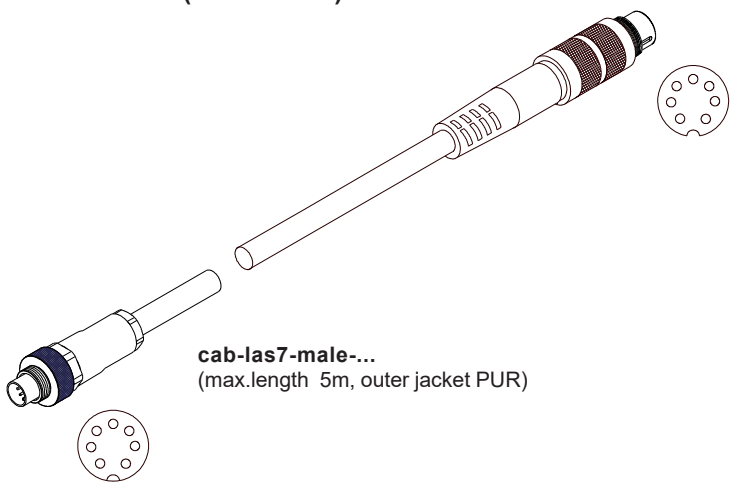

**cab-las7-male-...**
(max.length 5m, outer jacket PUR)

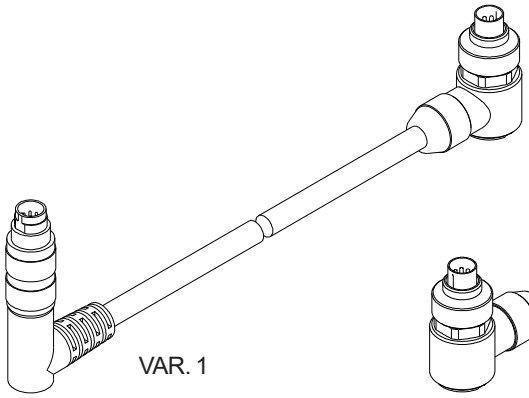


**cab-las7-male-w-... VAR. 1**
(max.length 5m, outer jacket PUR)

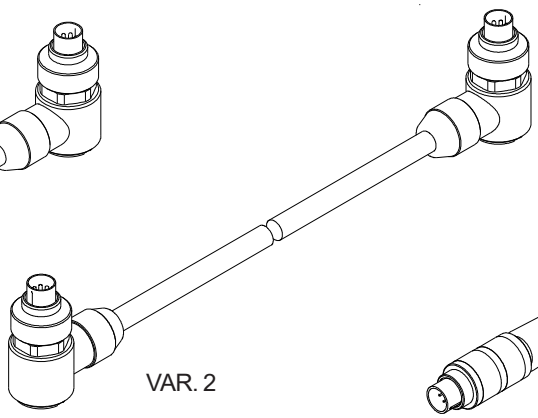


**cab-las7-male-w-... VAR. 2**
(max.length 5m, outer jacket PUR)

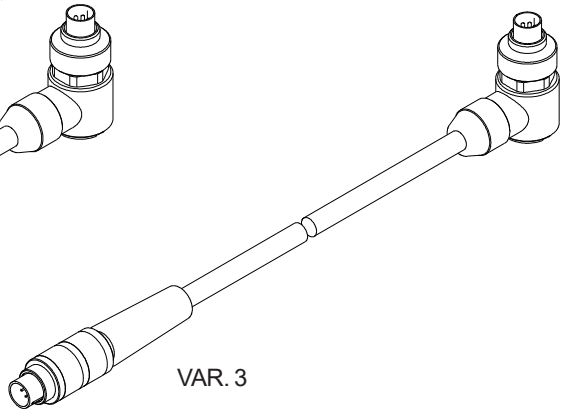


**cab-las7-male-w-... VAR. 3**
(max.length 5m, outer jacket PUR)

## Areas of Applications

**Areas of application for sensors in the GLAST-135-0°-... series:**

Sensors in the GLAST-135-0°-... series are primarily intended for testing transparent to semi-transparent films, but can also be used to test glass plates. The main focus is on the haze behavior of the materials being tested. Haze describes the cloudiness of a transparent material caused by light scattering within the material or on its surface. It is a key quality characteristic for plastic films and flat glass..

## Measurement Principle

**Measuring principle of the GLAST-135-0°-... series sensors:**

This measuring method (haze measurement in a modified form for testing transparent films and flat glass) is a transmitted light method in which a homogeneously and diffusely illuminated line grating is sharply imaged onto a line detector by means of receiving optics..

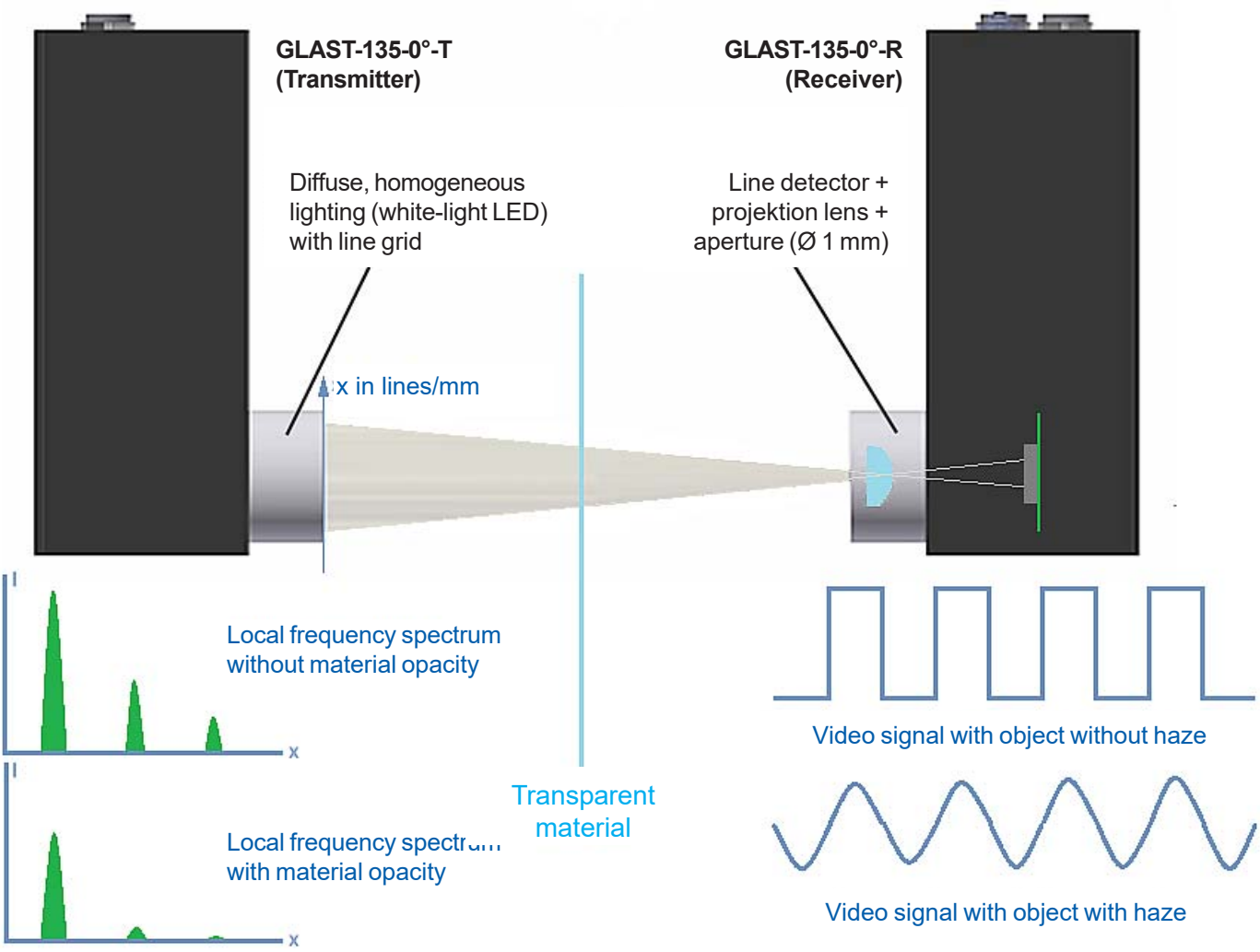


If no object is present between the transmitter and the receiver, or if the object exhibits no turbidity, the line detector generates a video signal with an almost rectangular waveform. This corresponds to very high contrast: the spatial-frequency spectrum still contains the harmonics, and the amplitude of the fundamental component is comparatively high. With turbid material, however, the harmonics nearly disappear and the amplitude of the fundamental component decreases accordingly.

## Visualization

**Visualization of the state code:**

The state code is visualized by means of 5 yellow LEDs at the housing of the GLAST sensor. The state code that is indicated at the LED display simultaneously is provided in binary mode (OUT BINARY) as 5-bit binary information at digital outputs OUT0 ... OUT4 of the 8-pole PLC connector.

The GLAST sensor is able to process a maximum of 31 states (code 0 … 30) corresponding to the individual rows in the TEACH TABLE. The sensor indicates an "error" or a "not detected state" by turning on all the LEDs (digital outputs OUT0 ... OUT4 at HIGH level).

Besides, the sensor can store a maximum of 5 spatial frequency spectrums for correlation evaluation.

A maximum of 5 teach states (no. 0, 1, 2, 3, 4) are permitted in DIRECT mode (OUT DIRECT HI or OUT DIRECT LO). If the selector switch is set to DIRECT HI, the corresponding digital output is HI and the other four are LO. If no state was detected, the digital outputs are in LO state (no LED is on).

If the selector switch is set to DIRECT LO, the corresponding digital output is LO and the other four are HI. If no state was detected, the digital outputs are in HI state (all LEDs are on).

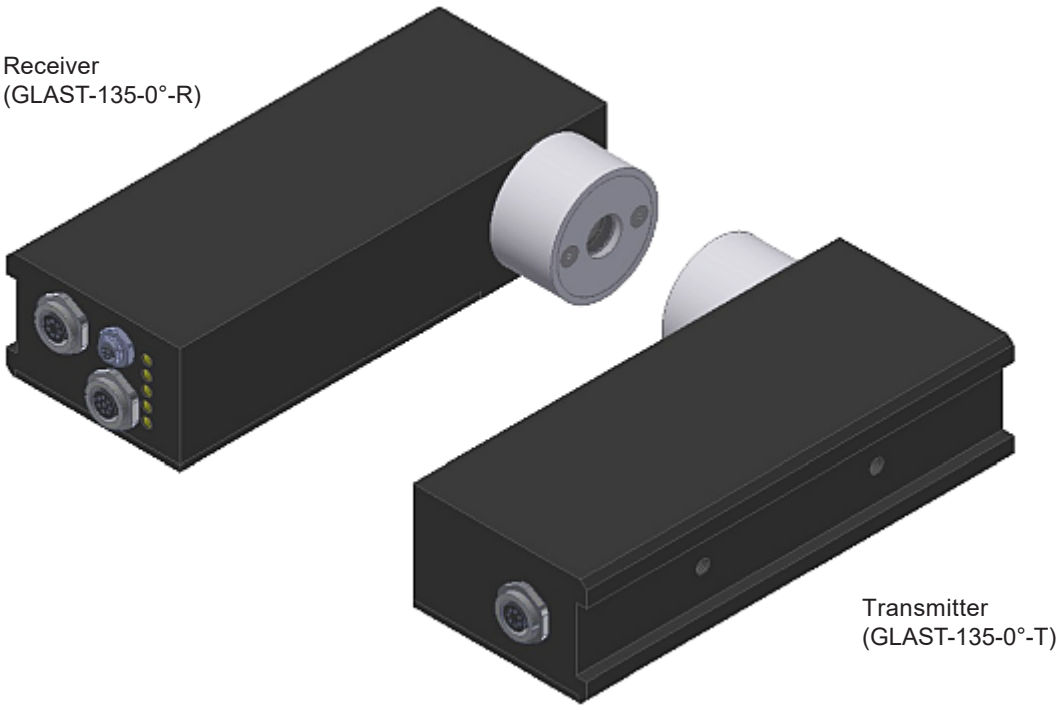

## LED Display

### LED display:

The state code is visualized by means of 5 yellow LEDs at the housing of the GLAST sensor.
The state code indicated at the LED display is output as 5-bit binary information at the digital outputs OUT0 ... OUT4 of the 8-pole PLC connector.

In the DIRECT mode the maximum number of state codes to be taught is 5. These 5 state codes can be directly output at the 5 digital outputs. The respective detected state code is displayed by means of the 5 yellow LEDs at the housing of the GLAST sensor.

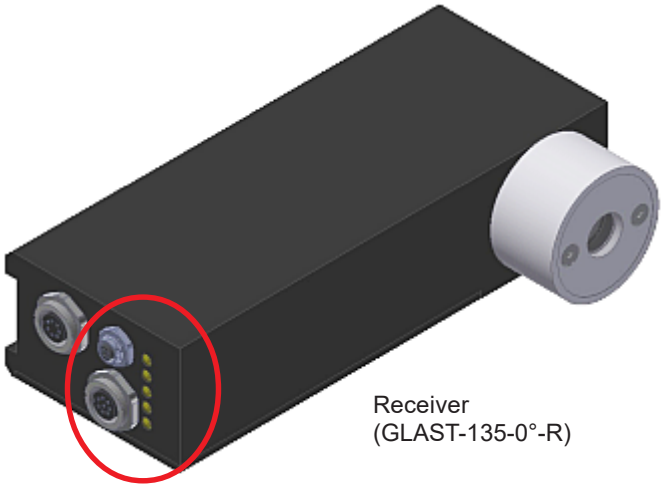

Receiver
(GLAST-135-0°-R)

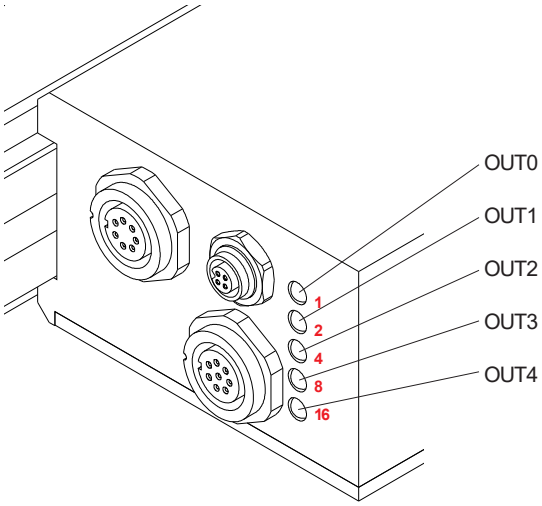


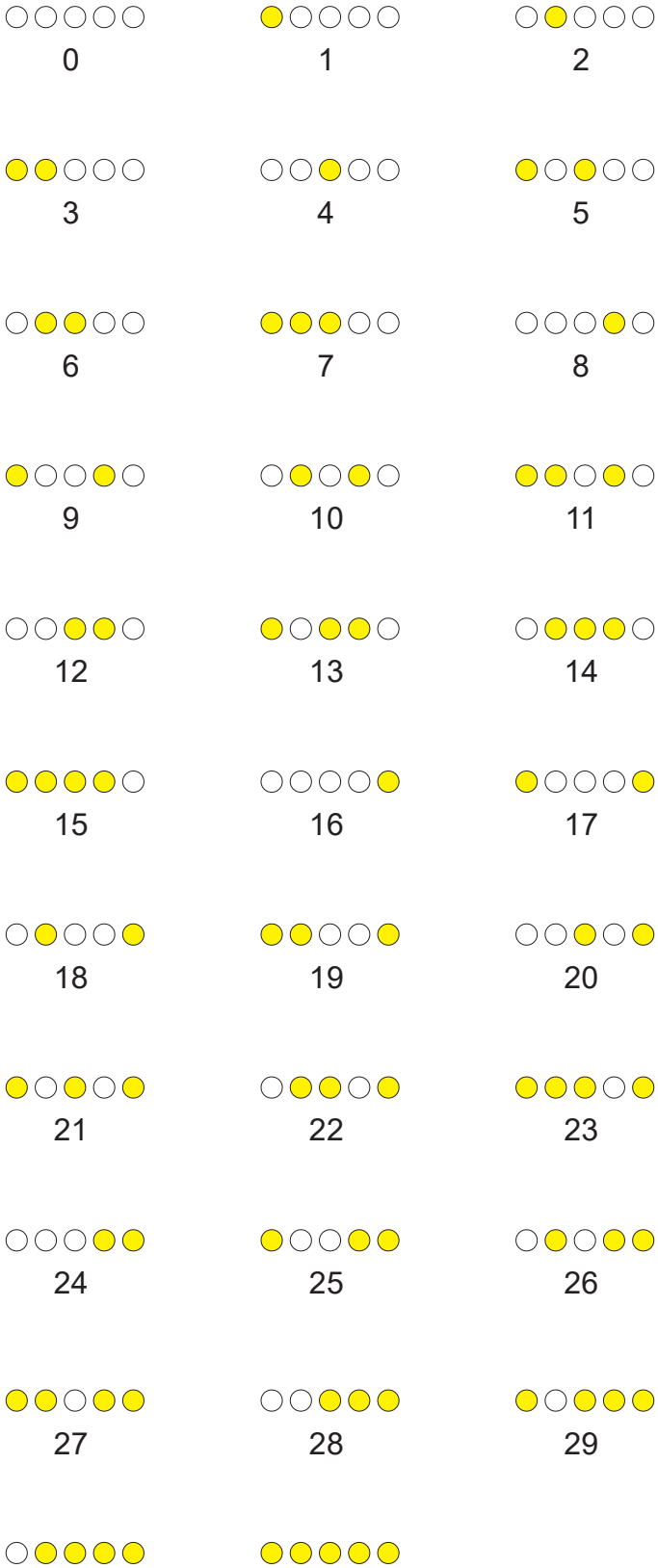

## Parameterization

**Software STRUCT-Scope: GENERAL-PARAMETER 1 and VIDEO & SPEC**

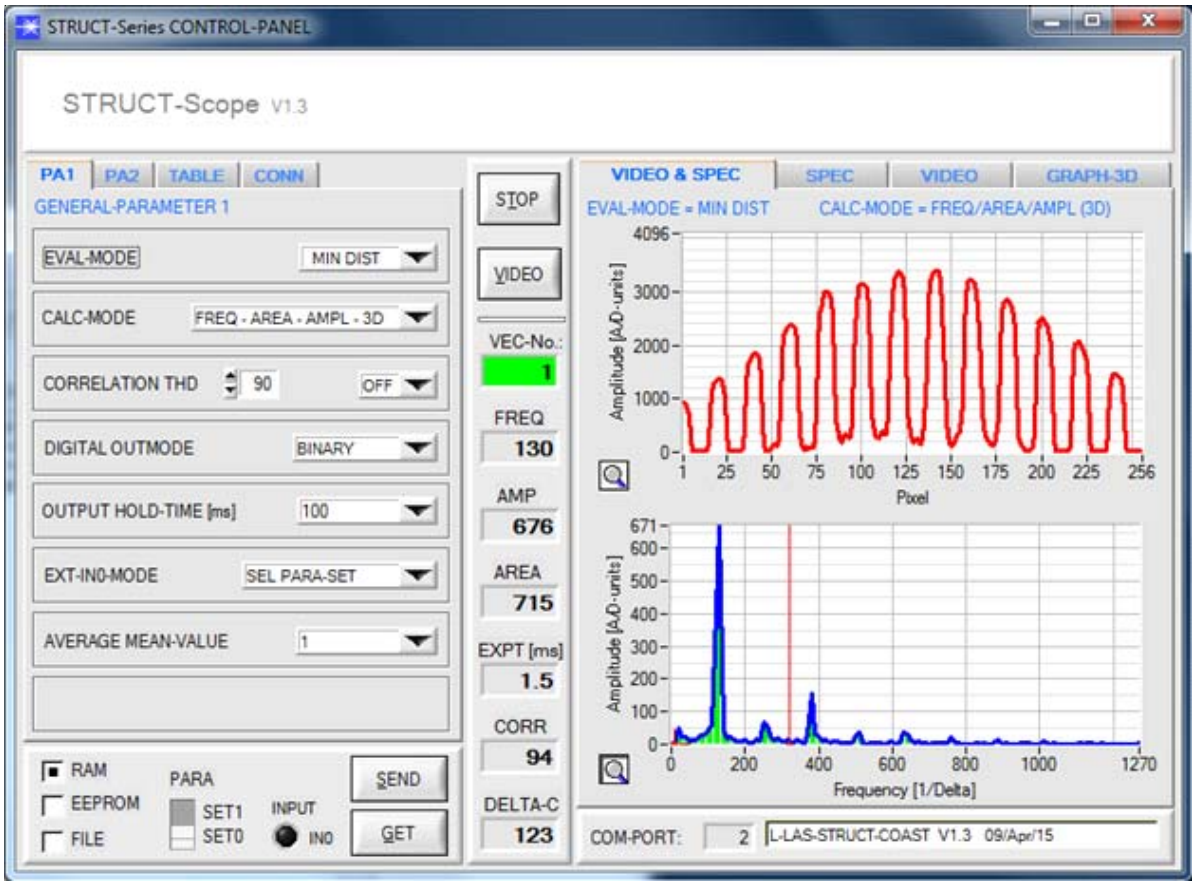


The RS232 interface (tabs PA1, PA2, and TABLE) is used to set sensor parameters such as:

| | |
|---|---|
| EVAL-MODE: | Evaluation mode in the 2D/3D number range |
| CALC-MODE: | Calculation mode of information from the spectrum |
| CORRELATION THD: | Threshold for use in correlation calculation |
| DIGITAL OUTMODE: | Control mode of digital outputs |
| OUTPUT HOLD-TIME: | Output hold time |
| EXT-IN0-MODE: | Setting of the external trigger mode.<br>(CONTINUOUS, TRIGG-IN0 L/H, TRIGG IN0 HIGH, SEL PARA-SET) |
| AVERAGE MEAN-VALUE: | Setting of averaging at the sensor (possible values: 1, 2,4,8,16 or 32) |

## Parameterization

**Software STRUCT-Scope: TEACH-TABLE**

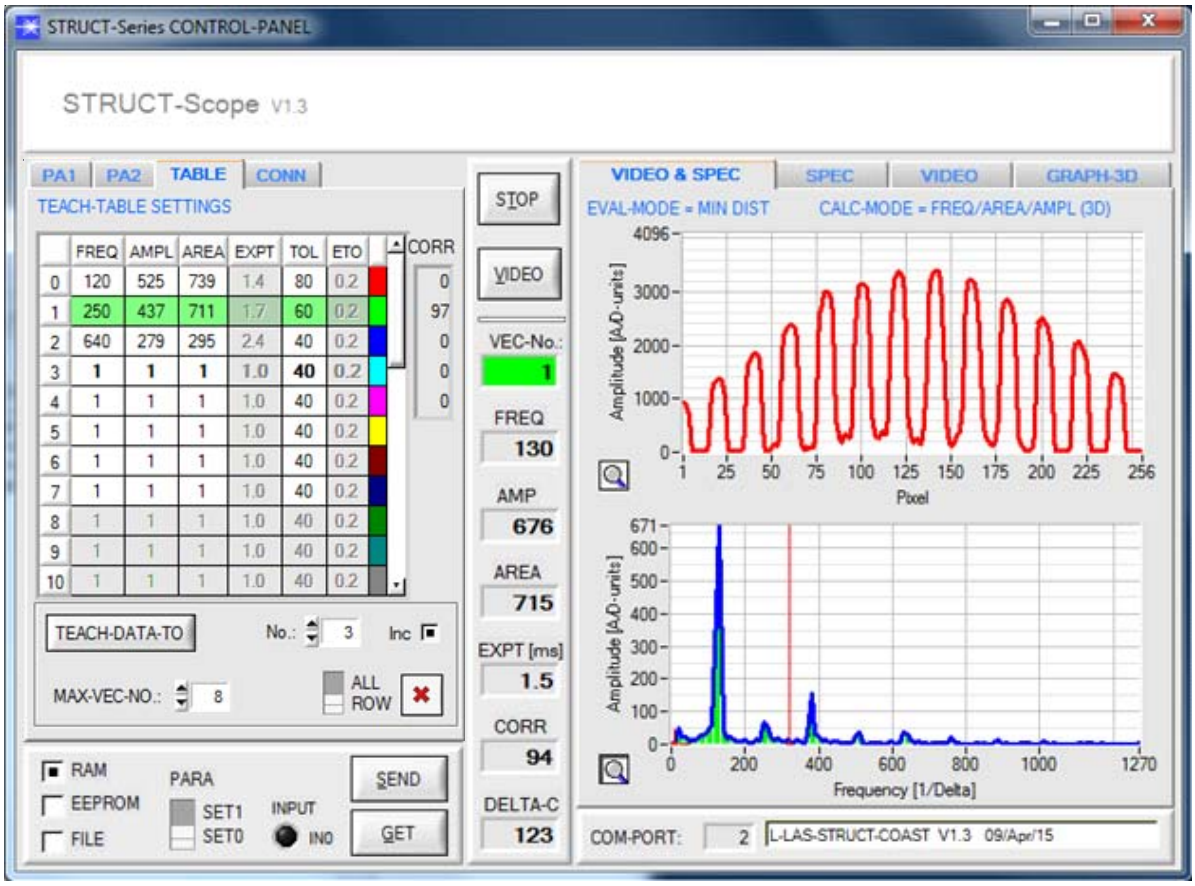


TEACH-TABLE:

Maximum of 31 structure vectors (vector entries) for the differentiation of 31 different structures, setting of tolerances for the evaluation values (TOL) from the spectrum, and setting of the tolerance for the exposure time (ETO).
Display of the correlation value **for max. 5 comparison spectrums** (spatial frequency spectrums).
TEACH-IN button for teaching the current spectrum to the teach table.

Display and input of the following evaluation values:
FREQ: Frequency
AMPL: Amplitude
AREA: Normed area ratio calculated from the frequency spectrum
EXPT: Exposure time of the respective structure
TOL: Tolerance for frequency and amplitude
ETO: Tolerance for exposure time

## Firmware Update

**Firmware update by means of the software „FirmwareLoader“:**

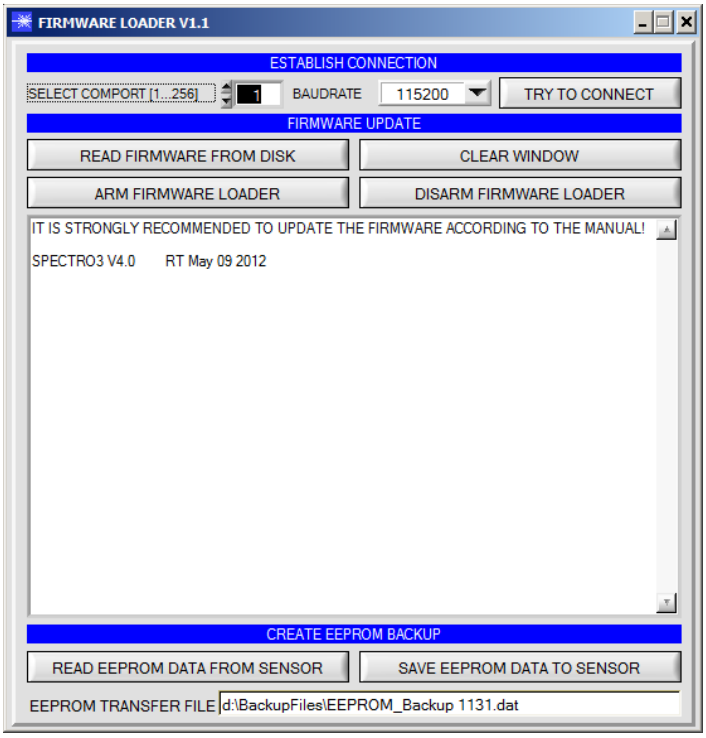


The software „Firmware Loader“ allows the user to perform an automatic firmware update. The update will be carried out through the RS232 interface.

An initialisation file (xxx.ini) and a firmware file (xxx.elf.S) are required for performing a firmware update. These files can be obtained from your supplier. In some cases an additional firmware file for the program memory (xxx.elf.p.S) is also needed, and this file will be automatically provided together with the other two files.

## Guide Rails

**The GLAST-135-0°-... delivery includes two TRA-L-LAS-TB-L300 guide rails:**

**GLAST-135-0°-0.5/0.5** incl. two T**RA-L-LAS-TB-L300** guide rails (total guide rail length 600 mm)
**GLAST-135-0°-1.0/1.0** incl. two T**RA-L-LAS-TB-L300** guide rails (total guide rail length 600 mm)
**GLAST-135-0°-2.0/2.0** incl. two T**RA-L-LAS-TB-L300** guide rails (total guide rail length 600 mm)

**Guide rails in other lengths are available as options as follows:**

**TRA-L-LAS-TB-L100** (total guide rail length 400 mm, see also dimensional drawing on p. 16)
**TRA-L-LAS-TB-L200** (total guide rail length 500 mm, see also dimensional drawing on p. 16)
**TRA-L-LAS-TB-L400** (total guide rail length 700 mm, see also dimensional drawing on p. 16)
**TRA-L-LAS-TB-L500** (total guide rail length 800 mm, see also dimensional drawing on p. 16)
**TRA-L-LAS-TB-L1000** (total guide rail length 1300 mm, see also dimensional drawing on p. 16)
**TRA-L-LAS-TB-L1500** (total guide rail length 1800 mm, see also dimensional drawing on p. 16)

**Picture:**
**TRA-L-LAS-TB-L300**

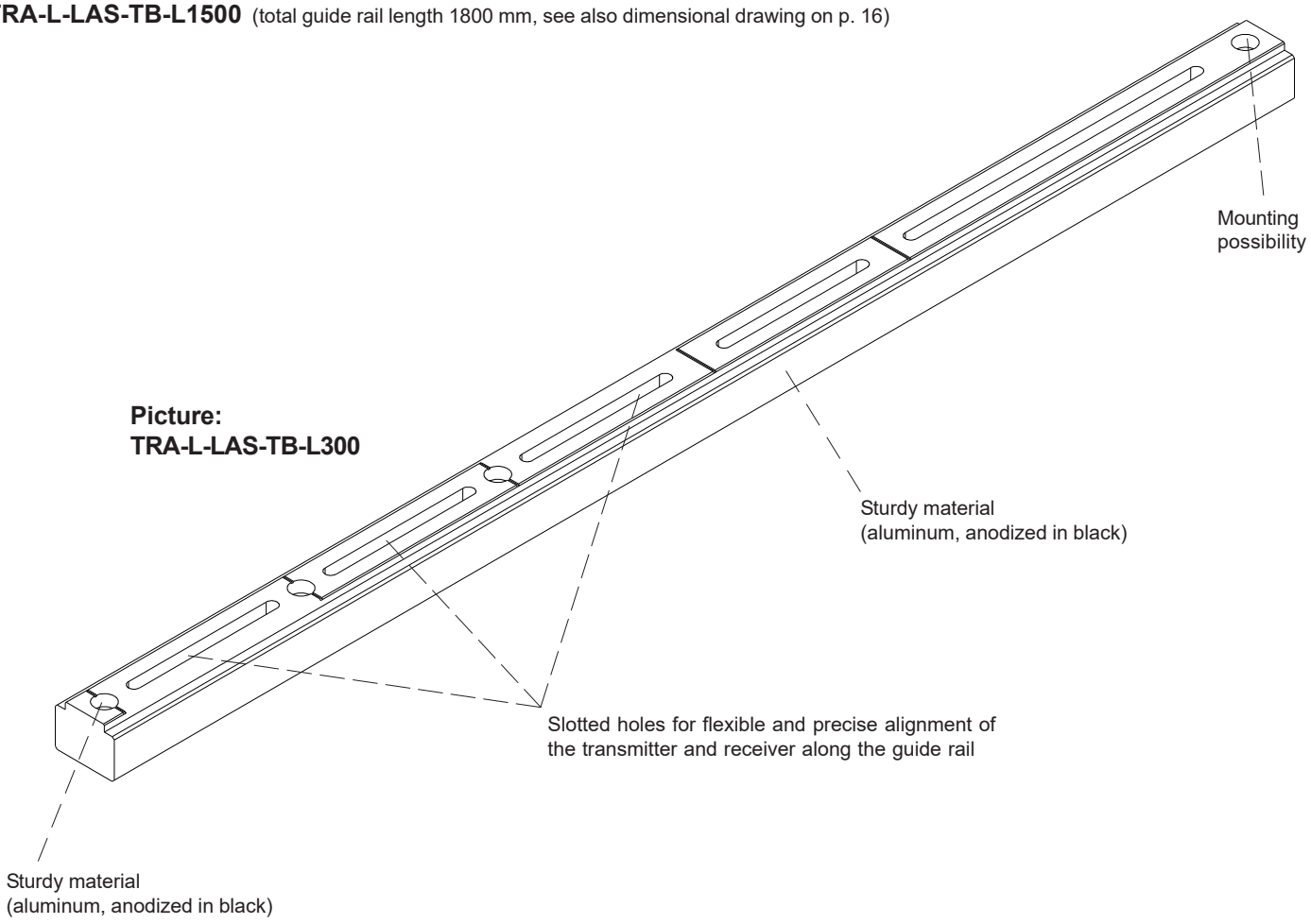

## Guide Rails

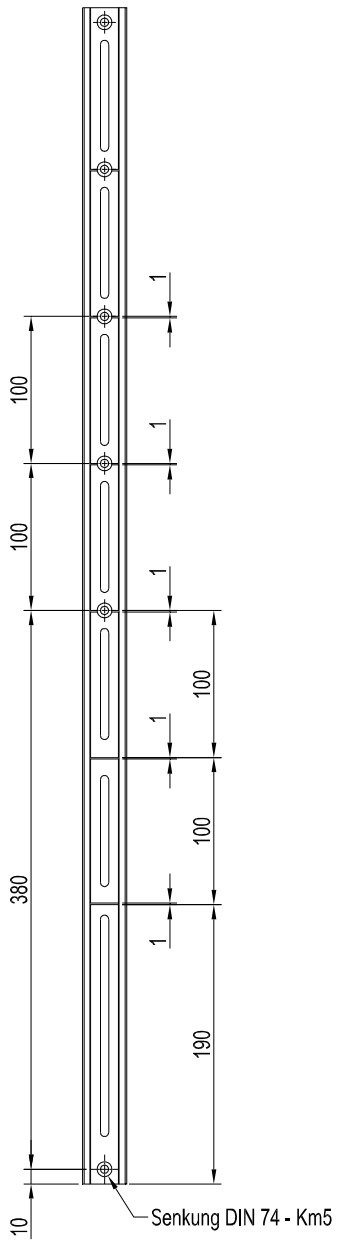


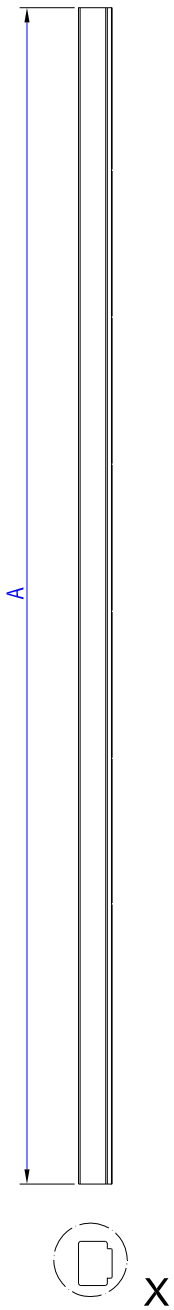


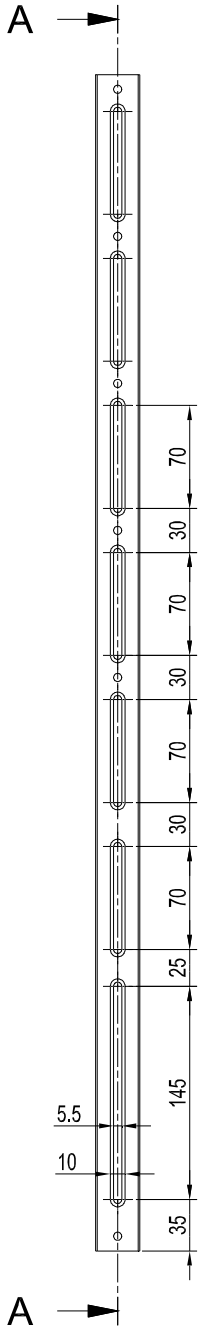


Schnitt A-A

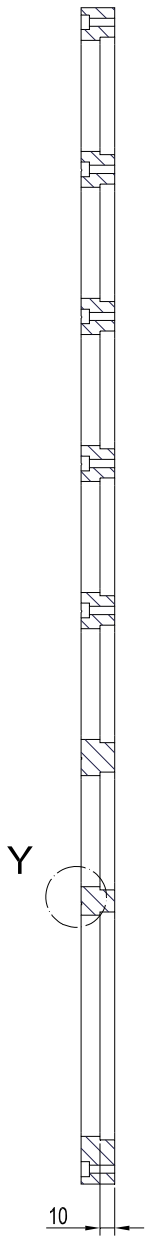


All dimensions in mm

X ( 1 : 1 )

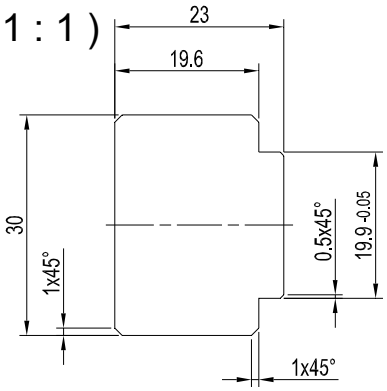


Y ( 1 : 1 )

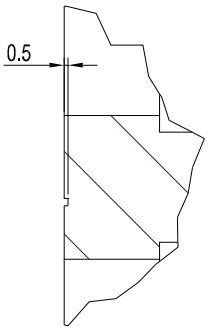


| Product name: | Dim. A: |
|---|---|
| TRA-L-LAS-TB-L100 | 400 mm |
| TRA-L-LAS-TB-L200 | 500 mm |
| TRA-L-LAS-TB-L300 | 600 mm |
| TRA-L-LAS-TB-L400 | 700 mm |
| TRA-L-LAS-TB-L500 | 800 mm |
| TRA-L-LAS-TB-L1000 | 1300 mm |
| TRA-L-LAS-TB-L1500 | 1800 mm |

*Sensor Instruments Entwicklungs- und Vertriebs-GmbH*
*D-94169 Thurmansbang • Schlinding 15*
*Tel. +49 (0)8544 9719-0 • info@sensorinstruments.de*