Specially sealed sensors - climatic proofed for use in a temperature range up to 120°C | IGMF 010 GSOP

- For use at temperatures up to 120°C
- Climatic proofed Water-tight and resistant to high pressure cleaning
- For use in cleaning processes
- Detection of baskets, trolleys, objects in washing plant
- For use in the food processing, steel and paper industries

M30x1.5 - sn 10 mm flush - Output PNP NC + NO

TYPE	IGMF 010 GSOP
Product ID	P30713
Thread/sleeve	M30x1,5
Operating Distance sn	10 mm flush
Output	switching output
Output function	PNP-NO / NC
Supply voltage	10...30 V DC
Current consumption max.	4 mA
Residual current	1
Overcurrent release	230 mA
Voltage drop max.	2 V
Switching frequency	1000 Hz
Ambient temperature	-25 °C ... 120 °C
EMC-class	A
Material housing	stainless steel AISI 316 Ti, stainless steel, PTFE
Material thread	stainless steel AISI 316 Ti (A4)
Material cap	PTFE
Protection [EN 60529]	IP 68 + IP 69K
Electrical connection	2 m FEP-cable 4x0.25 mm²

EGE-ELEKTRONIK SPEZIAL-SENSOREN GMBH
TEL. +49 4346 41580 . ege-elektronik.com

Technical Image

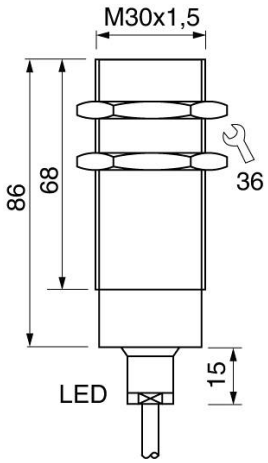

Pin Map

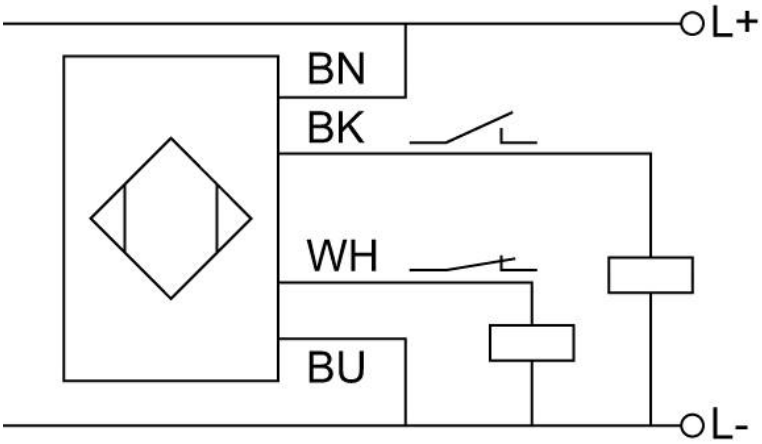

EGE-ELEKTRONIK SPEZIAL-SENSOREN GMBH
TEL. +49 4346 41580 . ege-elektronik.com