DGC 075 GI-L100

- Hydrostatic immersion probe for the continuous measurement of the filling level
- With analogue output
- The measuring probe is inserted from above, the cable can be routed along the tank wall
- For high tanks with stirrers suitable
- For adhesive, contaminated and highly viscous media
- Independent of foam formation and media movement

G3/4 - depth of immersion 100 cm - Output 4...20 mA

TYPE	DGC 075 GI-L100
Product ID	P21224
Immersion depth	100 cm
Output	analog output 4...20 mA
Supply voltage	24 V DC +/- 10 %
Current consumption max.	30 mA
Load resistance RL	200 Ω ... 500 Ω
Ambient temperature	-20 °C ... 75 °C
Medium temperature	-20 °C ... 75 °C
Compressive strength (at 25°C)	2 bar
Material sensor touched by medium	stainless steel AISI 316 Ti, stainless steel
Material gauge head	ceramic
Material housing	PBT
Seal material	FPM
Protection [EN 60529] housing	IP 65
Electrical connection	M12 connector
Accessories	Anschlusskabel SLG 3-..., SLW 3-...

EGE-ELEKTRONIK SPEZIAL-SENSOREN GMBH
TEL. +49 4346 41580 . ege-elektronik.com

Technical Image

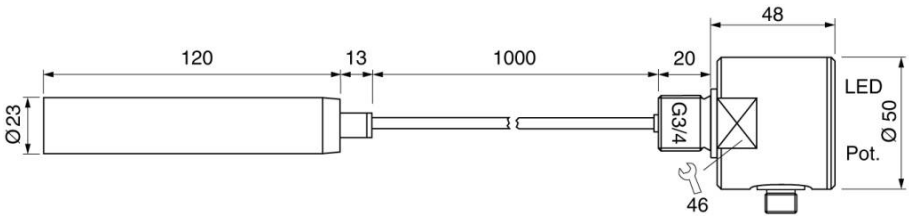
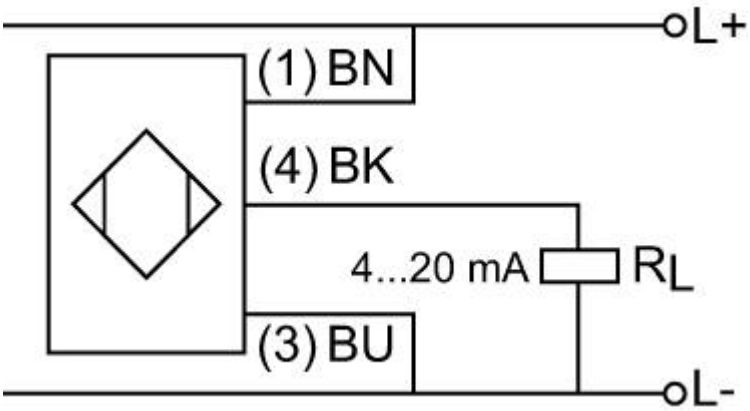
Pin Map